IX. Qualified Welding Procedure Specifications

Manual-Shielded Metal Arc Weld (SMAW)

Seal Weld

Qualified Welding Procedure Details

Welding procedures have been established and qualified for the following diameters and thicknesses for manual shielded metal arc weld techniques:

Manual-Shielded Metal Arc Weld (SMAW)

Qualified Welding Procedure Specifications			Groove Weld Carrier Pipe Wall Thickness		Fillet Weld Branch Pipe Wall Thickness		In-Service Weld Non-Carrier Pipe Wall Thickness
			< 3/16"	3/16" - 3/4"	< 3/16"	3/16" - 3/4"	All WT
≤ 42,000	Pipe OD	< 2-3/8"	SM-1	SM-2	SM-51	SM-52	SM-101
		2-3/8" - 12-3/4"	SM-3	SM-4	SM-53	SM-54	SM-102
		> 12-3/4"	SM-5	SM-6	SM-55	SM-56	SM-103
> 42,000 and ≤ 52,000	Pipe OD	< 2-3/8"	SM-7	SM-8	SM-57	SM-58	SM-107
		2-3/8" - 12-3/4"	SM-9	SM-10	SM-59	SM-60	SM-108
		> 12-3/4"	SM-11	SM-12	SM-61	SM-62	SM-109
> 52,000 and ≤ 60,000	Pipe OD	< 2-3/8"	SM-13	SM-14	SM-63	SM-64	SM-113
		2-3/8" - 12-3/4"	SM-15	SM-16	SM-65	SM-66	SM-114
		> 12-3/4"	SM-17	SM-18	SM-67	SM-68	SM-115
= 65,000	Pipe OD	< 2-3/8"	SM-19	SM-20	SM-69	SM-70	SM-119
		2-3/8" - 12-3/4"	SM-21	SM-22	SM-71	SM-72	SM-120
		> 12-3/4"	SM-23	SM-24	SM-73	SM-74	SM-121
= 70,000	Pipe OD	< 2-3/8"	SM-25	SM-26	SM-75	SM-76	SM-125
		2-3/8" - 12-3/4"	SM-27	SM-27	SM-77	SM-78	SM-126
		> 12-3/4"	SM-29	SM-30	SM-79	SM-80	SM-127
= 80,000	Pipe OD	< 2-3/8"	SM-31	SM-32	SM-81	SM-82	SM-131
		2-3/8" - 12-3/4"	SM-33	SM-34	SM-83	SM-84	SM-132
		> 12-3/4"	SM-35	SM-36	SM-85	SM-86	SM-133

SEAL WELD (Maintenance of In-service Pipe where Weld is Performed on Repair Fitting)

Seal Weld for PLIDCO repair fittings

All Strengths		Wall Thickness
		All WT
OD	All	SM-134

Cutter Seal Weld for bolt-on tee removal

≤ 42,000 psi		Wall Thickness
		All WT
OD	2-3/8" - 12-3/4"	SM-135

Qualified Welding Procedure Details

The qualified welding procedures are described in detail below, each with a link to the pdf version for printing.

WPS SM-1
WPS SM-2
WPS SM-3
WPS SM-4
WPS SM-9
WPS SM-10
WPS SM-12
WPS SM-16
WPS SM-18
WPS SM-22
WPS SM-24
WPS SM-30
WPS SM-51
WPS SM-52
WPS SM-53
WPS SM-54
WPS SM-58
WPS SM-60
WPS SM-62
WPS SM-64
WPS SM-66
WPS SM-68
WPS SM-70
WPS SM-72
WPS SM-74
WPS SM-78
WPS SM-101
WPS SM-102
WPS SM-108
WPS SM-109
WPS SM-114
WPS SM-115
WPS SM-120
WPS SM-121
WPS SM-127
WPS SM-134
WPS SM-135 (under development)

WPS SM-1 (click here for pdf version)

WPS No: SM-1 DATE: 5/1/2019

DESCRIPTION:	Butt joint groove welding procedure meeting the following requirements.
WELDING PROCESS:	Manual Shielded Metal Arc (SMAW) using stick electrodes.
PIPE AND FILLER MATERIAL REQUIREMENTS	
PIPE AND FITTING MATERIAL:	API 5L steel pipe and fitting grades with yield strengths less than or equal to 42,000 psi.
DIAMETER AND WALL THICKNESS:	Less than 2-3/8(2.375)" O.D. and less than 3/16(0.1875)" W.T.

SHEILDING FLUX:	AWS cellulosic on all passes

DIRECTION OF WELDING:	Downhill	CURRENT/POLARITY:	Direct Current; reverse polarity, electrode positive
WELDING TECHNIQUE:	Stringer	TEMP. MEASUREMENT:	Pyrometer or Tempil sticks
PIPE POSITION:	Pipe axis to be in a fixed position. Roll welding will be permitted provided proper alignment and support are maintained by use of skids or V-blocks to accommodate two or more full lengths of pipe preventing sag.		
NUMBER OF WELDERS:	One welder maximum.		
TIME LAPSE BETWEEN PASSES:	Maximum time between the completion of the root pass and the start of the second shall be 5 minutes. Each pass must be completed in its entirety before subsequent passes are initiated.		
TYPE/REMOVAL OF LINE-UP CLAMP:	Approved external or internal clamps if required for alignment; 100 percent of root pass shall be completed before internal clamps are removed ; No less than 50 percent of root pass for external clamps		
CLEANING METHOD:	Use power and/or hand tools; remove all rust, dirt, and other foreign matter before starting weld; remove slag from bead surface before starting next bead; Root bead should be power ground as much as practical; All other passes should be power buffed as much as practical and power ground as needed; clean finished weld.		
PREHEAT AND POSTHEAT:	Preheat to 150°F Min to 350°F Max when the pipe has a temperature of 40°F or below, is wet, has a wall thickness over 0.500", a carbon equivalent over 0.40% or a yield strength greater than 52ksi. Temperature control shall be verified with approved devices. No PWHT required.		

BUTT WELD JOINT DESIGN

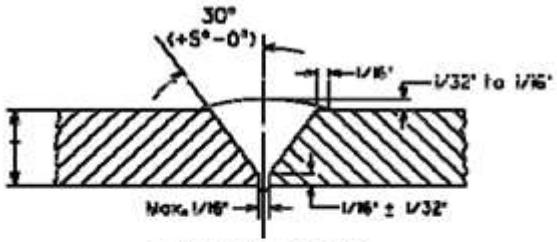

STANDARD "V" BEVEL BUTT JOINT

QUALIFIED JOINT DESIGN CONDITIONS

"V" groove composed of two 30 (+5 - 0) bevels with 1/16" spacing and 1/16" (+/- 1/32") land.

MINIMUM NO. OF PASSES

W.T. (in)	MIN. PASSES
≤ 0.250	3
> 0.250 ≤ 0.450	4
> 0.450 ≤ 0.650	5
> 0.650 ≤ 0.750	7

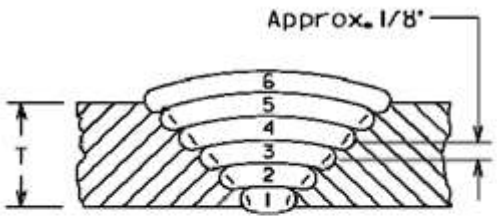

APPROVED FILLER METAL SELECTIONS

WALL THICK. (in)	ELECTRODE SIZE BY PASS			
	ROOT	HOT	FILLER(S)*	CAP(S)
MATERIAL	E6010	E6010	E6010	E6010
< 0.188	3/32"	3/32"		3/32"
MATERIAL	E6010	E7010	E7010	E7010
< 0.188	1/8"	1/8"		1/8"

ASSOCIATED ELECTRICAL CHARACTERISTICS

FILLER MATERIAL		WELDING PARAMETERS		TRAVEL
SIZE	CLASSIFICATION	AMPERAGE	VOLTAGE	SPEED (IPM)
3/32"	E6010	35 - 85	21 - 35	2 - 14
1/8"	E6010	40 - 75	21 - 33	2 - 14
1/8"	E7010	50 - 95	21 - 33	2 - 14

*Stripper/Fill as required using the parameters of filler pass selection and associated characteristics

[1] The filler metal shall conform to AWS filler metal group 1 and A5.5 specification utilizing an E7010-G or E7010-P1 electrode.

The procedure qualification was conducted in accordance with the requirements of the latest approved edition of API Standard 1104, CFR Title 49 Part 192 and Dominion Energy North Carolina and Dominion Energy South Carolina Engineering Specifications.

WPS SM-2 (click here for pdf version)

WPS No: SM-2

DATE: 5/1/2019

DESCRIPTION:	Butt joint groove welding procedure meeting the following requirements.		
WELDING PROCESS:	Manual Shielded Metal Arc (SMAW) using stick electrodes.		
PIPE AND FILLER MATERIAL REQUIREMENTS			
PIPE AND FITTING MATERIAL:	API 5L steel pipe and fitting grades with yield strengths less than or equal to 42,000 psi.		
DIAMETER AND WALL THICKNESS:	Less than 2-3/8(2.375)" O.D. and 3/16(0.1875)" thru 3/4(0.750)" W.T.		
FILLER MATERIAL:	AWS E6010 root pass; AWS E7010[1] on remaining passes (exception if using 3/32" E6010 on all passes)		
SHEILDING FLUX:	AWS cellulosic on all passes		
PRODUCTION WELDING CONDITIONS			
DIRECTION OF WELDING:	Downhill	CURRENT/POLARITY:	Direct Current; reverse polarity, electrode positive
WELDING TECHNIQUE:	Stringer	TEMP. MEASUREMENT:	Pyrometer or Tempil sticks
PIPE POSITION:	Pipe axis to be in a fixed position. Roll welding will be permitted provided proper alignment and support are maintained by use of skids or V-blocks to accommodate two or more full lengths of pipe preventing sag.		
NUMBER OF WELDERS:	One welder maximum.		
TIME LAPSE BETWEEN PASSES:	Maximum time between the completion of the root pass and the start of the second shall be 5 minutes. Each pass must be completed in its entirety before subsequent passes are initiated.		
TYPE/REMOVAL OF LINE-UP CLAMP:	Approved external or internal clamps if required for alignment; 100 percent of root pass shall be completed before internal clamps are removed ; No less than 50 percent of root pass for external clamps		
CLEANING METHOD:	Use power and/or hand tools; remove all rust, dirt, and other foreign matter before starting weld; remove slag from bead surface before starting next bead; Root bead should be power ground as much as practical; All other passes should be power buffed as much as practical and power ground as needed; clean finished weld.		
PREHEAT AND POSTHEAT:	Preheat to 150°F Min to 350°F Max when the pipe has a temperature of 40°F or below, is wet, has a wall thickness over 0.500", a carbon equivalent over 0.40% or a yield strength greater than 52ksi. Temperature control shall be verified with approved devices. No PWHT required.		
BUTT WELD JOINT DESIGN			
	QUALIFIED JOINT DESIGN CONDITIONS		
30°	"V" groove composed of two 30 (+5 - 0)		

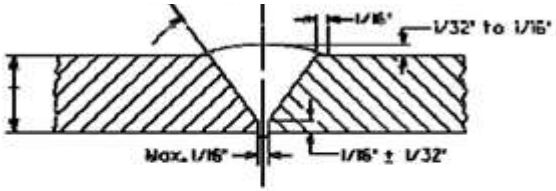

STANDARD "V" BEVEL
BUTT JOINT

1/32") land.

MINIMUM NO. OF PASSES	
W.T. (in)	MIN. PASSES
≤ 0.250	3
> 0.250 ≤ 0.450	4
> 0.450 ≤ 0.650	5
> 0.650 ≤ 0.750	7

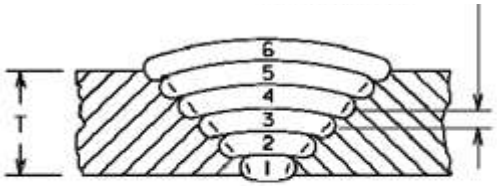

APPROVED FILLER METAL SELECTIONS				
WALL THICK.	ELECTRODE SIZE BY PASS			
(in)	ROOT	HOT	FILLER(S)*	CAP(S)
MATERIAL	E6010	E6010	E6010	E6010
< 0.188	3/32"	3/32"		3/32"
MATERIAL	E6010	E7010	E7010	E7010
< 0.188	1/8"	1/8"		1/8"

ASSOCIATED ELECTRICAL CHARACTERISTICS				
FILLER MATERIAL		WELDING PARAMETERS		TRAVEL
SIZE	CLASSIFICATION	AMPERAGE	VOLTAGE	SPEED (IPM)
3/32"	E6010	35 - 85	21 - 35	2 - 14
1/8"	E6010	70 - 125	23 - 33	2 - 14
1/8"	E7010	45 - 120	20 - 34	2 - 14

*Stripper/Fill as required using the parameters of filler pass selection and associated characteristics

[1] The filler metal shall conform to AWS filler metal group 1 and A5.5 specification utilizing an E7010-G or E7010-P1 electrode.

The procedure qualification was conducted in accordance with the requirements of the latest approved edition of API Standard 1104, CFR Title 49 Part 192 and Dominion Energy North Carolina and Dominion Energy South Carolina Engineering Specifications.

WPS SM-3 (click here for pdf version)

WPS No: SM-3

DATE: 5/1/2019

DESCRIPTION:	Butt joint groove welding procedure meeting the following requirements.
WELDING PROCESS:	Manual Shielded Metal Arc (SMAW) using stick electrodes.
PIPE AND FILLER MATERIAL REQUIREMENTS	
PIPE AND FITTING MATERIAL:	Steel pipe and fitting grades with yield strengths less than or equal to 42,000 psi.
DIAMETER AND WALL THICKNESS:	2-3/8(2.375)" thru 12-3/4(12.750)" O.D. and less than 3/16(0.1875)" W.T.
FILLER MATERIAL:	AWS E6010 root pass; AWS E7010[1] on remaining passes
SHEILDING FLUX:	AWS cellulosic on all passes
PRODUCTION WELDING CONDITIONS	

DIRECTION OF WELDING:	Downhill	CURRENT/POLARITY:	Direct current, reverse polarity, electrode positive
WELDING TECHNIQUE:	Stringer	TEMP. MEASUREMENT:	Pyrometer or Tempil sticks
PIPE POSITION:	Pipe axis to be in a fixed position. Roll welding will be permitted provided proper alignment and support are maintained by use of skids or V-blocks to accommodate two or more full lengths of pipe preventing sag.		
NUMBER OF WELDERS:	One or two welders as needed; Root and hot pass welders shall be equal in number; Only one welder is required for roll or fabrication welding.		
TIME LAPSE BETWEEN PASSES:	Maximum time between the completion of the root pass and the start of the second shall be 5 minutes. Each pass must be completed in its entirety before subsequent passes are initiated.		
TYPE/REMOVAL OF LINE-UP CLAMP:	Approved external or internal clamps if required for alignment; 100 percent of root pass shall be completed before internal clamps are removed ; No less than 50 percent of root pass for external clamps		
CLEANING METHOD:	Use power and/or hand tools; remove all rust, dirt, and other foreign matter before starting weld; remove slag from bead surface before starting next bead; Root bead should be power ground as much as practical; All other passes should be power buffed as much as practical and power ground as needed; clean finished weld.		
PREHEAT AND POSTHEAT:	Preheat to 150°F Min to 350°F Max when the pipe has a temperature of 40°F or below, is wet, has a wall thickness over 0.500", a carbon equivalent over 0.40% or a yield strength greater than 52ksi. Temperature control shall be verified with approved devices. No PWHT required.		

BUTT WELD JOINT DESIGN

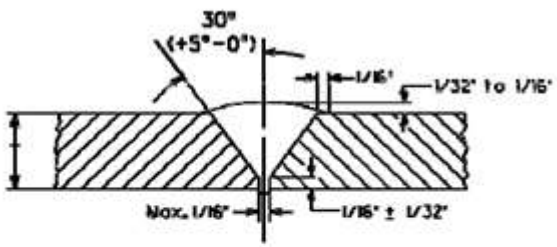

STANDARD "V" BEVEL BUTT JOINT

QUALIFIED JOINT DESIGN CONDITIONS

"V" groove composed of two 30 (+5 - 0) bevels with 1/16" spacing and 1/16" (+/- 1/32") land.

MINIMUM NO. OF PASSES

W.T. (in)	MIN. PASSES
≤ 0.250	3
> 0.250 ≤ 0.450	4
> 0.450 ≤ 0.650	5
> 0.650 ≤ 0.750	7

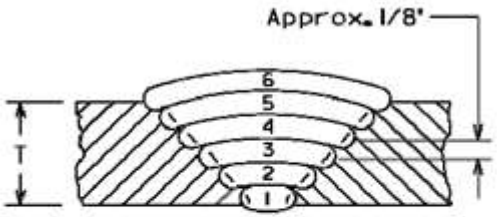

APPROVED FILLER METAL SELECTIONS

WALL THICK. (in)	ELECTRODE SIZE BY PASS			
	ROOT	HOT	FILLER(S)*	CAP(S)
MATERIAL	E6010	E7010	E7010	E7010
< 0.188	3/32", 1/8"	1/8"	1/8"	1/8", 5/32"

ASSOCIATED ELECTRICAL CHARACTERISTICS

FILLER MATERIAL		WELDING PARAMETERS		TRAVEL
SIZE	CLASSIFICATION	AMPERAGE	VOLTAGE	SPEED (IPM)
3/32"	E6010	50 - 95	22 - 35	2 - 14
1/8"	E6010	70 - 115	21 - 32	2 - 14
1/8"	E7010	50 - 105	22 - 31	2 - 14
5/32"	E7010	75 - 115	23 - 34	2 - 14

*Stripper/Fill as required using the parameters of filler pass selection and associated characteristics

[1] The filler metal shall conform to AWS filler metal group 1 and A5.5 specification utilizing an E7010-G or E7010-P1 electrode.

The procedure qualification was conducted in accordance with the requirements of the latest approved edition of API Standard 1104, CFR Title 49 Part 192

WPS SM-4 (click here for pdf version)

WPS No: SM-4

DATE: 5/1/2019

DESCRIPTION:	Butt joint groove welding procedure meeting the following requirements.
WELDING PROCESS:	Manual Shielded Metal Arc (SMAW) using stick electrodes.

PIPE AND FILLER MATERIAL REQUIREMENTS

PIPE AND FITTING MATERIAL:	Steel pipe and fitting grades with yield strengths less than or equal to 42,000 psi.
DIAMETER AND WALL THICKNESS:	2-3/8(2.375)" thru 12-3/4(12.750)" O.D. and 3/16(0.1875)" thru 3/4(0.750)" W.T.
FILLER MATERIAL:	AWS E6010 root pass; AWS E7010[1] on remaining passes
SHEILDING FLUX:	AWS cellulosic on all passes

PRODUCTION WELDING CONDITIONS

DIRECTION OF WELDING:	Downhill	CURRENT/POLARITY:	Direct Current; reverse polarity, electrode positive
WELDING TECHNIQUE:	Stringer	TEMP. MEASUREMENT:	Pyrometer or Tempil sticks

PIPE POSITION:	Pipe axis to be in a fixed position. Roll welding will be permitted provided proper alignment and support are maintained by use of skids or V-blocks to accommodate two or more full lengths of pipe preventing sag.
NUMBER OF WELDERS:	One or two welders as needed; Root and hot pass welders shall be equal in number; Only one welder is required for roll or fabrication welding.
TIME LAPSE BETWEEN PASSES:	Maximum time between the completion of the root pass and the start of the second shall be 5 minutes. Each pass must be completed in its entirety before subsequent passes are initiated.
TYPE/REMOVAL OF LINE-UP CLAMP:	Approved external or internal clamps if required for alignment; 100 percent of root pass shall be completed before internal clamps are removed ; No less than 50 percent of root pass for external clamps
CLEANING METHOD:	Use power and/or hand tools; remove all rust, dirt, and other foreign matter before starting weld; remove slag from bead surface before starting next bead; Root bead should be power ground as much as practical; All other passes should be power buffed as much as practical and power ground as needed; clean finished weld.
PREHEAT AND POSTHEAT:	Preheat to 150°F Min to 350°F Max when the pipe has a temperature of 40°F or below, is wet, has a wall thickness over 0.500", a carbon equivalent over 0.40% or a yield strength greater than 52ksi. Temperature control shall be verified with approved devices. No PWHT required.

BUTT WELD JOINT DESIGN

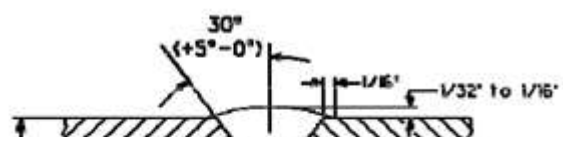

QUALIFIED JOINT DESIGN CONDITIONS
"V" groove composed of two 30 (+5 - 0) bevels with 1/16" spacing and 1/16" (+/- 1/32") land.
MINIMUM NO. OF PASSES

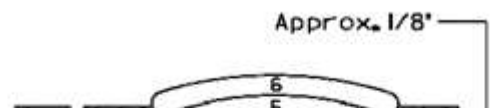

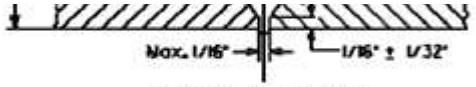

STANDARD "V" BEVEL BUTT JOINT

W.T. (in)	MIN. PASSES
≤ 0.250	3
> 0.250 ≤ 0.450	4
> 0.450 ≤ 0.650	5
> 0.650 ≤ 0.750	7

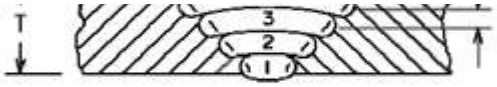

APPROVED FILLER METAL SELECTIONS

WALL THICK. (in)	ELECTRODE SIZE BY PASS			
	ROOT	HOT	FILLER(S)*	CAP(S)
MATERIAL	E6010	E7010	E7010	E7010
0.188 - 0.237	1/8"	1/8"	1/8", 5/32"	1/8", 5/32"
0.250 - 0.312	1/8"	1/8"	5/32"	5/32", 3/16"
0.322 - 0.375	1/8"	1/8"	5/32"	5/32", 3/16"
0.406 - 0.500				

ASSOCIATED ELECTRICAL CHARACTERISTICS

FILLER MATERIAL		WELDING PARAMETERS		TRAVEL
SIZE	CLASSIFICATION	AMPERAGE	VOLTAGE	SPEED (IPM)
1/8"	E6010	70 - 120	22 - 32	2 - 14
1/8"	E7010	45 - 110	21 - 33	2 - 14
5/32"	E7010	75 - 120	24 - 33	2 - 14
3/16"	E7010	100 - 200	22 - 40	2 - 14

*Stripper/Fill as required using the parameters of filler pass selection and associated characteristics

[1] The filler metal shall conform to AWS filler metal group 1 and A5.5 specification utilizing an E7010-G or E7010-P1 electrode.

The procedure qualification was conducted in accordance with the requirements of the latest approved edition of API Standard 1104, CFR Title 49 Part 192 and Dominion Energy North Carolina and Dominion Energy South Carolina Engineering Specifications.

WPS SM-9 (click here for pdf version)

WPS No: SM-9

DATE: 5/1/2019

DESCRIPTION:	Butt joint groove welding procedure meeting the following requirements.
WELDING PROCESS:	Manual Shielded Metal Arc (SMAW) using stick electrodes.

PIPE AND FILLER MATERIAL REQUIREMENTS

PIPE AND FITTING MATERIAL:	Steel pipe and fitting grades with yield strengths greater than 42,000psi but less than or equal to 52,000 psi.
DIAMETER AND WALL THICKNESS:	2-3/8(2.375)" thru 12-3/4(12.750)" O.D. and less than 3/16(0.1875)" W.T.
FILLER MATERIAL:	AWS E6010 root pass; AWS E7010[1] on remaining passes
SHEILDING FLUX:	AWS cellulosic on all passes

PRODUCTION WELDING CONDITIONS

DIRECTION OF WELDING:	Downhill	CURRENT/POLARITY:	Direct Current; reverse polarity, electrode positive
WELDING TECHNIQUE:	Stringer	TEMP. MEASUREMENT:	Pyrometer or Tempil sticks
	Pipe axis to be in a fixed position. Roll welding will be permitted provided proper alignment and support are		

	maintained by use of skids or V-blocks to accommodate two or more full lengths of pipe preventing sag.
NUMBER OF WELDERS:	One or two welders as needed; Root and hot pass welders shall be equal in number; Only one welder is required for roll or fabrication welding.
TIME LAPSE BETWEEN PASSES:	Maximum time between the completion of the root pass and the start of the second shall be 5 minutes. Each pass must be completed in its entirety before subsequent passes are initiated.
TYPE/REMOVAL OF LINE-UP CLAMP:	Approved external or internal clamps if required for alignment; 100 percent of root pass shall be completed before internal clamps are removed ; No less than 50 percent of root pass for external clamps
CLEANING METHOD:	Use power and/or hand tools; remove all rust, dirt, and other foreign matter before starting weld; remove slag from bead surface before starting next bead; Root bead should be power ground as much as practical; All other passes should be power buffed as much as practical and power ground as needed; clean finished weld.
PREHEAT AND POSTHEAT:	Preheat to 150°F Min to 350°F Max when the pipe has a temperature of 40°F or below, is wet, has a wall thickness over 0.500", a carbon equivalent over 0.40% or a yield strength greater than 52ksi. Temperature control shall be verified with approved devices. No PWHT required.

BUTT WELD JOINT DESIGN

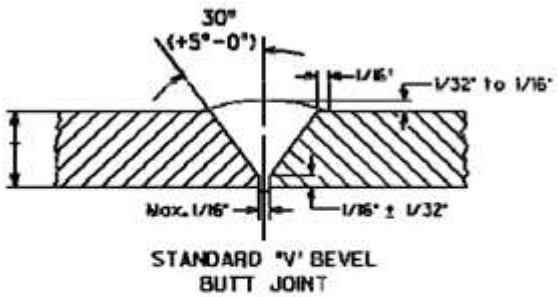

QUALIFIED JOINT DESIGN CONDITIONS

"V" groove composed of two 30 (+5 - 0) bevels with 1/16" spacing and 1/16" (+/- 1/32") land.

MINIMUM NO. OF PASSES

W.T. (in)	MIN. PASSES
≤ 0.250	3
> 0.250 ≤ 0.450	4
> 0.450 ≤ 0.650	5
> 0.650 ≤ 0.750	7

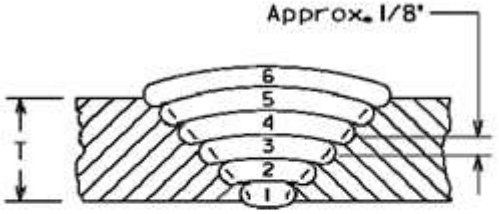

APPROVED FILLER METAL SELECTIONS

WALL THICK. (in)	ELECTRODE SIZE BY PASS			
	ROOT	HOT	FILLER(S)*	CAP(S)
MATERIAL	E6010	E7010	E7010	E7010
< 0.188	3/32", 1/8"	1/8"	1/8"	1/8", 5/32"

ASSOCIATED ELECTRICAL CHARACTERISTICS

FILLER MATERIAL		WELDING PARAMETERS		TRAVEL
SIZE	CLASSIFICATION	AMPERAGE	VOLTAGE	SPEED (IPM)
3/32"	E6010	50 - 95	22 - 35	2 - 14
1/8"	E6010	55 - 115	22 - 35	2 - 14
1/8"	E7010	55 - 115	22 - 35	2 - 14
5/32"	E7010	60 - 115	22 - 35	2 - 14

*Stripper/Fill as required using the parameters of filler pass selection and associated characteristics

[1] The filler metal shall conform to AWS filler metal group 1 and A5.5 specification utilizing an E7010-G or E7010-P1 electrode.

The procedure qualification was conducted in accordance with the requirements of the latest approved edition of API Standard 1104, CFR Title 49 Part 192 and Dominion Energy North Carolina and Dominion Energy South Carolina Engineering Specifications.

WPS SM-10(click here for pdf version)

WPS No: SM-10

DATE: 5/1/2019

DESCRIPTION:	Butt joint groove welding procedure meeting the following requirements.
WELDING PROCESS:	Manual Shielded Metal Arc (SMAW) using stick electrodes.

PIPE AND FILLER MATERIAL REQUIREMENTS

PIPE AND FITTING MATERIAL:	Steel pipe and fitting grades with yield strengths greater than 42,000psi but less than or equal to 52,000 psi.
DIAMETER AND WALL THICKNESS:	2-3/8(2.375)" thru 12-3/4(12.750)" O.D. and 3/16(0.1875)" thru 3/4(0.750)" W.T.
FILLER MATERIAL:	AWS E6010 root pass; AWS E7010[1] on remaining passes
SHEILDING FLUX:	AWS cellulosic on all passes

PRODUCTION WELDING CONDITIONS

DIRECTION OF WELDING:	Downhill	CURRENT/POLARITY:	Direct Current; reverse polarity, electrode positive
WELDING TECHNIQUE:	Stringer	TEMP. MEASUREMENT:	Pyrometer or Tempil sticks

PIPE POSITION:	Pipe axis to be in a fixed position. Roll welding will be permitted provided proper alignment and support are maintained by use of skids or V-blocks to accommodate two or more full lengths of pipe preventing sag.
NUMBER OF WELDERS:	One or two welders as needed; Root and hot pass welders shall be equal in number; Only one welder is required for roll or fabrication welding.
TIME LAPSE BETWEEN PASSES:	Maximum time between the completion of the root pass and the start of the second shall be 5 minutes. Each pass must be completed in its entirety before subsequent passes are initiated.
TYPE/REMOVAL OF LINE-UP CLAMP:	Approved external or internal clamps if required for alignment; 100 percent of root pass shall be completed before internal clamps are removed ; No less than 50 percent of root pass for external clamps
CLEANING METHOD:	Use power and/or hand tools; remove all rust, dirt, and other foreign matter before starting weld; remove slag from bead surface before starting next bead; Root bead should be power ground as much as practical; All other passes should be power buffed as much as practical and power ground as needed; clean finished weld.
PREHEAT AND POSTHEAT:	Preheat to 150°F Min to 350°F Max when the pipe has a temperature of 40°F or below, is wet, has a wall thickness over 0.500", a carbon equivalent over 0.40% or a yield strength greater than 52ksi. Temperature control shall be verified with approved devices. No PWHT required.

BUTT WELD JOINT DESIGN

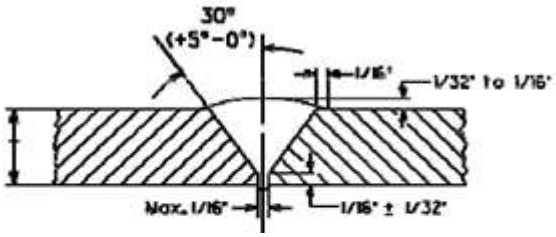

QUALIFIED JOINT DESIGN CONDITIONS

"V" groove composed of two 30 (+5 - 0) bevels with 1/16" spacing and 1/16" (+/- 1/32") land.

MINIMUM NO. OF PASSES

W.T. (in)	MIN. PASSES
≤ 0.250	3

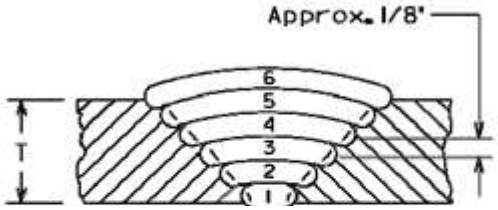

BUTT JOINT	> 0.450 ≤ 0.650	5
	> 0.650 ≤ 0.750	7

APPROVED FILLER METAL SELECTIONS				
WALL THICK. (in)	ELECTRODE SIZE BY PASS			
	ROOT	HOT	FILLER(S)*	CAP(S)
MATERIAL	E6010	E7010	E7010	E7010
0.188 - 0.237	1/8"	1/8"		1/8", 5/32"
0.250 - 0.312	1/8", 5/32"	1/8", 5/32"	1/8", 5/32"	5/32", 3/16"
0.322 - 0.375	1/8", 5/32"	1/8", 5/32"	1/8", 5/32"	5/32", 3/16"
0.406 - 0.500				

ASSOCIATED ELECTRICAL CHARACTERISTICS				
FILLER MATERIAL		WELDING PARAMETERS		TRAVEL
SIZE	CLASSIFICATION	AMPERAGE	VOLTAGE	SPEED (IPM)
1/8"	E6010	80 - 130	20 - 33	2 - 14
1/8"	E7010	75 - 120	20 - 33	2 - 14
5/32"	E6010	95 - 145	20 - 32	2 - 14
5/32"	E7010	75 - 150	13 - 33	2 - 14
3/16"	E7010	100 - 160	22 - 36	2 - 14

*Stripper/Fill as required using the parameters of filler pass selection and associated characteristics

[1] The filler metal shall conform to AWS filler metal group 1 and A5.5 specification utilizing an E7010-G or E7010-P1 electrode.

The procedure qualification was conducted in accordance with the requirements of the latest approved edition of API Standard 1104, CFR Title 49 Part 192 and Dominion Energy North Carolina and Dominion Energy South Carolina Engineering Specifications.

WPS SM-12 (click here for pdf version)

WPS No: SM-12

DATE: 5/1/2019

DESCRIPTION:	Butt joint groove welding procedure meeting the following requirements.
WELDING PROCESS:	Manual Shielded Metal Arc (SMAW) using stick electrodes.
PIPE AND FILLER MATERIAL REQUIREMENTS	
PIPE AND FITTING MATERIAL:	Steel pipe and fitting grades with yield strengths greater than 42,000psi but less than or equal to 52,000 psi.
DIAMETER AND WALL THICKNESS:	Over 12-3/4(12.750)" O.D. and 3/16(0.1875)" thru 3/4(0.750)" W.T.
FILLER MATERIAL:	AWS E6010 root pass; AWS E7010[1] on remaining passes
SHEILDING FLUX:	AWS cellulosic on all passes

PRODUCTION WELDING CONDITIONS			
DIRECTION OF WELDING:	Downhill	CURRENT/POLARITY:	Direct Current; reverse polarity, electrode positive
WELDING TECHNIQUE:	Stringer	TEMP. MEASUREMENT:	Pyrometer or Tempil sticks
PIPE POSITION:	Pipe axis to be in a fixed position. Roll welding will be permitted provided proper alignment and support are maintained by use of skids or V-blocks to accommodate two or more full lengths of pipe preventing sag.		
NUMBER OF WELDERS:	Minimum two welders required for sizes 14" thru 26" O.D.; Three or four welders required for sizes greater than 26" O.D.; Root and hot pass welders shall be equal in number; Only one welder is required for roll or fabrication welding.		

TIME LAPSE BETWEEN PASSES:	Minimum time between the completion of the root pass and the start of the second shall be 5 minutes; each pass must be completed in its entirety before subsequent passes are initiated.
TYPE/REMOVAL OF LINE-UP CLAMP:	Approved external or internal clamps if required for alignment; 100 percent of root pass shall be completed before internal clamps are removed ; No less than 50 percent of root pass for external clamps
CLEANING METHOD:	Use power and/or hand tools; remove all rust, dirt, and other foreign matter before starting weld; remove slag from bead surface before starting next bead; Root bead should be power ground as much as practical; All other passes should be power buffed as much as practical and power ground as needed; clean finished weld.
PREHEAT AND POSTHEAT:	Preheat to 150°F Min to 350°F Max when the pipe has a temperature of 40°F or below, is wet, has a wall thickness over 0.500", a carbon equivalent over 0.40% or a yield strength greater than 52ksi. Temperature control shall be verified with approved devices. No PWHT required.

BUTT WELD JOINT DESIGN

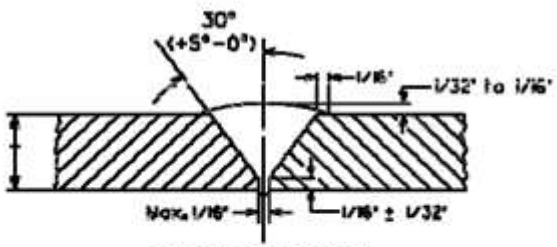

STANDARD "V" BEVEL BUTT JOINT

QUALIFIED JOINT DESIGN CONDITIONS

"V" groove composed of two 30 (+5 - 0) bevels with 1/16" spacing and 1/16" (+/- 1/32") land.

MINIMUM NO. OF PASSES

W.T. (in)	MIN. PASSES
≤ 0.250	3
> 0.250 ≤ 0.450	4
> 0.450 ≤ 0.650	5
> 0.650 ≤ 0.750	7

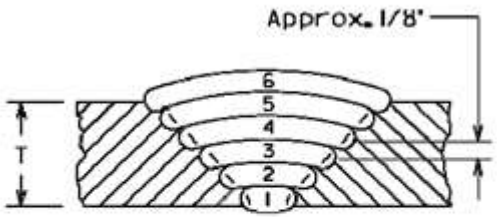

APPROVED FILLER METAL SELECTIONS

WALL THICK. (in)	ELECTRODE SIZE BY PASS			
	ROOT	HOT	FILLER(S)*	CAP(S)
MATERIAL	E6010	E7010	E7010	E7010
0.188 - 0.237				
0.250 - 0.312	1/8"	1/8", 5/32"	5/32", 3/16"	5/32", 3/16"
0.322 - 0.375	1/8", 5/32"	5/32", 3/16"	5/32", 3/16"	5/32", 3/16"
0.406 - 0.500	1/8", 5/32"	5/32", 3/16"	5/32", 3/16"	5/32", 3/16"

ASSOCIATED ELECTRICAL CHARACTERISTICS

FILLER MATERIAL		WELDING PARAMETERS		TRAVEL
SIZE	CLASSIFICATION	AMPERAGE	VOLTAGE	SPEED (IPM)
1/8"	E6010	70 - 130	22 - 35	2 - 14
1/8"	E7010	70 - 130	22 - 35	2 - 14
5/32"	E6010	85 - 165	21 - 33	2 - 14
5/32"	E7010	90 - 190	21 - 35	2 - 14
3/16"	E7010	105 - 190	21 - 35	2 - 14

*Stripper/Fill as required using the parameters of filler pass selection and associated characteristics

[1] The filler metal shall conform to AWS filler metal group 1 and A5.5 specification utilizing an E7010-G or E7010-P1 electrode.

The procedure qualification was conducted in accordance with the requirements of the latest approved edition of API Standard 1104, CFR Title 49 Part 192 and Dominion Energy North Carolina and Dominion Energy South Carolina Specifications.

WPS SM-16 (click here for pdf version)

WPS No: SM-16

DATE: 5/1/2019

DESCRIPTION:	Butt joint groove welding procedure meeting the following requirements.
WELDING PROCESS:	Manual Shielded Metal Arc (SMAW) using stick electrodes.

PIPE AND FILLER MATERIAL REQUIREMENTS

PIPE AND FITTING MATERIAL:	Steel pipe and fitting grades with yield strengths greater than 52,000psi but less than or equal to 60,000 psi.
DIAMETER AND WALL THICKNESS:	2-3/8(2.375)" thru 12-3/4(12.750)" O.D. and 3/16(0.1875)" thru 3/4(0.750)" W.T.
FILLER MATERIAL:	AWS E6010 root pass; AWS E8010[1] on remaining passes
SHEILDING FLUX:	AWS cellulosic on all passes

PRODUCTION WELDING CONDITIONS

DIRECTION OF WELDING:	Downhill	CURRENT/POLARITY:	Direct Current; reverse polarity, electrode positive
WELDING TECHNIQUE:	Stringer	TEMP. MEASUREMENT:	Pyrometer or Tempil sticks

PIPE POSITION:	Pipe axis to be in a fixed position. Roll welding will be permitted provided proper alignment and support are maintained by use of skids or V-blocks to accommodate two or more full lengths of pipe preventing sag.
NUMBER OF WELDERS:	One or two welders as needed; Root and hot pass welders shall be equal in number; Only one welder is required for roll or fabrication welding.
TIME LAPSE BETWEEN PASSES:	Maximum time between the completion of the root pass and the start of the second shall be 5 minutes. Each pass must be completed in its entirety before subsequent passes are initiated.
TYPE/REMOVAL OF LINE-UP CLAMP:	Approved external or internal clamps if required for alignment; 100 percent of root pass shall be completed before internal clamps are removed ; No less than 50 percent of root pass for external clamps
CLEANING METHOD:	Use power and/or hand tools; remove all rust, dirt, and other foreign matter before starting weld; remove slag from bead surface before starting next bead; Root bead should be power ground as much as practical; All other passes should be power buffed as much as practical and power ground as needed; clean finished weld.
PREHEAT AND POSTHEAT:	Preheat to 150°F Min to 350°F Max when the pipe has a temperature of 40°F or below, is wet, has a wall thickness over 0.500", a carbon equivalent over 0.40% or a yield strength greater than 52ksi. Temperature control shall be verified with approved devices. No PWHT required.

BUTT WELD JOINT DESIGN

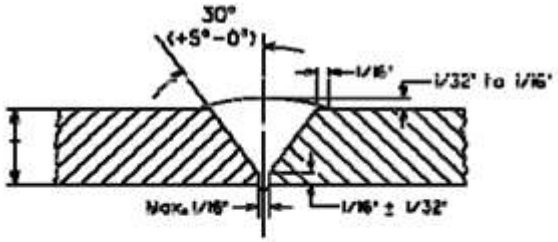

STANDARD "V" BEVEL BUTT JOINT

QUALIFIED JOINT DESIGN CONDITIONS

"V" groove composed of two 30 (+5 - 0) bevels with 1/16" spacing and 1/16" (+/- 1/32") land.

MINIMUM NO. OF PASSES

W.T. (in)	MIN. PASSES
≤ 0.250	3
> 0.250 ≤ 0.450	4
> 0.450 ≤ 0.650	5
> 0.650 ≤ 0.750	7

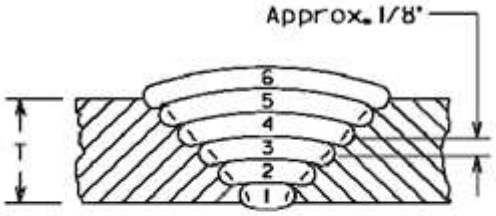

WALL THICK. (in)	ELECTRODE SIZE BY PASS			
	ROOT	HOT	FILLER(S)*	CAP(S)
MATERIAL	E6010	E8010	E8010	E8010
0.188 - 0.237	1/8"	1/8"		1/8", 5/32"
0.250 - 0.312	1/8", 5/32"	1/8", 5/32"	1/8", 5/32"	5/32", 3/16"
0.322 - 0.375	1/8", 5/32"	1/8", 5/32"	1/8", 5/32"	5/32", 3/16"
0.406 - 0.500				

FILLER MATERIAL		WELDING PARAMETERS		TRAVEL
SIZE	CLASSIFICATION	AMPERAGE	VOLTAGE	SPEED (IPM)
1/8"	E6010	75 - 165	18 - 40	2 - 14
1/8"	E8010	90 - 155	18 - 40	2 - 14
5/32"	E6010	80 - 150	18 - 40	2 - 14
5/32"	E8010	80 - 175	18 - 40	2 - 14
3/16"	E8010	100 - 185	20 - 44	2 - 14

*Stripper/Fill as required using the parameters of filler pass selection and associated characteristics

[1] The filler metal shall conform to AWS filler metal group 2 and A5.5 specification utilizing an E8010-G or E8010-P1 electrode.

The procedure qualification was conducted in accordance with the requirements of the latest approved edition of API Standard 1104, CFR Title 49 Part 192 and Dominion Energy North Carolina and Dominion Energy South Carolina Engineering Specifications.

WPS SM-18 (click here for pdf version)

WPS No: SM-18

DATE: 5/1/2019

DESCRIPTION:	Butt joint groove welding procedure meeting the following requirements.		
WELDING PROCESS:	Manual Shielded Metal Arc (SMAW) using stick electrodes.		
PIPE AND FILLER MATERIAL REQUIREMENTS			
PIPE AND FITTING MATERIAL:	Steel pipe and fitting grades with yield strengths greater than 52,000psi but less than or equal to 60,000 psi.		
DIAMETER AND WALL THICKNESS:	Over 12-3/4(12.750)" O.D. and 3/16(0.1875)" thru 3/4(0.750)" W.T.		
FILLER MATERIAL:	AWS E6010 root pass; AWS E8010[1] on remaining passes		
SHEILDING FLUX:	AWS cellulosic on all passes		
PRODUCTION WELDING CONDITIONS			
DIRECTION OF WELDING:	Downhill	CURRENT/POLARITY:	Direct Current; reverse polarity, electrode positive
WELDING TECHNIQUE:	Stringer	TEMP. MEASUREMENT:	Pyrometer or Tempil sticks
PIPE POSITION:	Pipe axis to be in a fixed position. Roll welding will be permitted provided proper alignment and support are maintained by use of skids or V-blocks to accommodate two or more full lengths of pipe preventing sag.		
NUMBER OF WELDERS:	Minimum two welders required for sizes 14" thru 26" O.D.; Three or four welders required for sizes greater than 26" O.D.; Root and hot pass welders shall be equal in number; Only one welder is required for roll or fabrication welding.		
TIME LAPSE BETWEEN PASSES:	Maximum time between the completion of the root pass and the start of the second shall be 5 minutes. Each pass must be completed in its entirety before subsequent passes are initiated.		
TYPE/REMOVAL OF LINE-UP CLAMP:	Approved external or internal clamps if required for alignment; 100 percent of root pass shall be completed before internal clamps are removed ; No less than 50 percent of root pass for external clamps		

CLEANING METHOD:	Use power and/or hand tools, remove all rust, dirt, and other foreign matter before starting weld, remove slag from bead surface before starting next bead; Root bead should be power ground as much as practical; All other passes should be power buffed as much as practical and power ground as needed; clean finished weld.
PREHEAT AND POSTHEAT:	Preheat to 150°F Min to 350°F Max when the pipe has a temperature of 40°F or below, is wet, has a wall thickness over 0.500", a carbon equivalent over 0.40% or a yield strength greater than 52ksi. Temperature control shall be verified with approved devices. No PWHT required.

BUTT WELD JOINT DESIGN

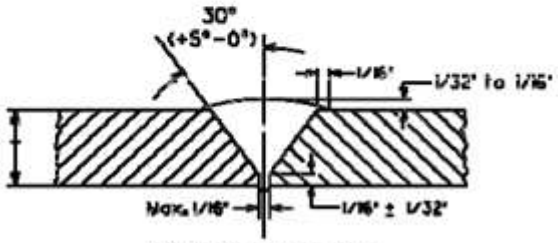

STANDARD "V" BEVEL BUTT JOINT

QUALIFIED JOINT DESIGN CONDITIONS

"V" groove composed of two 30 (+5 - 0) bevels with 1/16" spacing and 1/16" (+/- 1/32") land.

MINIMUM NO. OF PASSES

W.T. (in)	MIN. PASSES
≤ 0.250	3
> 0.250 ≤ 0.450	4
> 0.450 ≤ 0.650	5
> 0.650 ≤ 0.750	7

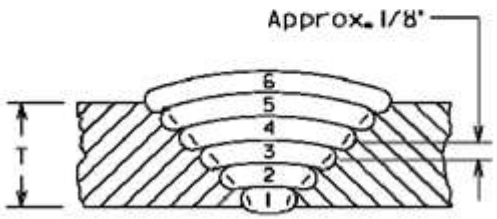

APPROVED FILLER METAL SELECTIONS

WALL THICK. (in)	ELECTRODE SIZE BY PASS			
	ROOT	HOT	FILLER(S)*	CAP(S)
MATERIAL	E6010	E8010	E8010	E8010
0.188 - 0.237				
0.250 - 0.312	1/8"	1/8", 5/32"	5/32", 3/16"	5/32", 3/16"
0.322 - 0.375	1/8", 5/32"	5/32", 3/16"	5/32", 3/16"	5/32", 3/16"
0.406 - 0.500	1/8", 5/32"	5/32", 3/16"	5/32", 3/16"	5/32", 3/16"

ASSOCIATED ELECTRICAL CHARACTERISTICS

FILLER MATERIAL		WELDING PARAMETERS		TRAVEL
SIZE	CLASSIFICATION	AMPERAGE	VOLTAGE	SPEED (IPM)
1/8"	E6010	90 - 170	28 - 51	2 - 14
1/8"	E8010	80 - 120	20 - 31	2 - 14
5/32"	E6010	100 - 160	22 - 35	2 - 14
5/32"	E8010	115 - 175	21 - 44	2 - 14
3/16"	E8010	120 - 200	22 - 34	2 - 14

*Stripper/Fill as required using the parameters of filler pass selection and associated characteristics

[1] The filler metal shall conform to AWS filler metal group 2 and A5.5 specification utilizing an E8010-G or E8010-P1 electrode.

The procedure qualification was conducted in accordance with the requirements of the latest approved edition of API Standard 1104, CFR Title 49 Part 192 and Dominion Energy North Carolina and Dominion Energy South Carolina Engineering Specifications.

WPS SM-22 (click here for pdf version)

WPS No: SM-22 DATE: 5/1/2019

DESCRIPTION:	Butt joint groove welding procedure meeting the following requirements.
WELDING PROCESS:	Manual Shielded Metal Arc (SMAW) using stick electrodes.

PIPE AND FILLER MATERIAL REQUIREMENTS

PIPE AND FITTING MATERIAL:	Steel pipe and fitting grades with yield strengths equal to 65,000 psi.
DIAMETER AND WALL THICKNESS:	2-3/8(2.375)" thru 12-3/4(12.750)" O.D. and 3/16(0.1875)" thru 3/4(0.750)" W.T.
FILLER MATERIAL:	AWS E6010 root pass; AWS E8010[1] on remaining passes
SHEILDING FLUX:	AWS cellulosic on all passes

PRODUCTION WELDING CONDITIONS

DIRECTION OF WELDING:	Downhill	CURRENT/POLARITY:	Direct Current; reverse polarity, electrode positive
WELDING TECHNIQUE:	Stringer	TEMP. MEASUREMENT:	Pyrometer or Tempil sticks

PIPE POSITION:	Pipe axis to be in a fixed position. Roll welding will be permitted provided proper alignment and support are maintained by use of skids or V-blocks to accommodate two or more full lengths of pipe preventing sag.
NUMBER OF WELDERS:	One or two welders as needed; Root and hot pass welders shall be equal in number; Only one welder is required for roll or fabrication welding.
TIME LAPSE BETWEEN PASSES:	Maximum time between the completion of the root pass and the start of the second shall be 5 minutes. Each pass must be completed in its entirety before subsequent passes are initiated.
TYPE/REMOVAL OF LINE-UP CLAMP:	Approved external or internal clamps if required for alignment; 100 percent of root pass shall be completed before internal clamps are removed ; No less than 50 percent of root pass for external clamps
CLEANING METHOD:	Use power and/or hand tools; remove all rust, dirt, and other foreign matter before starting weld; remove slag from bead surface before starting next bead; Root bead should be power ground as much as practical; All other passes should be power buffed as much as practical and power ground as needed; clean finished weld.
PREHEAT AND POSTHEAT:	Preheat to 150°F Min to 350°F Max when the pipe has a temperature of 40°F or below, is wet, has a wall thickness over 0.500", a carbon equivalent over 0.40% or a yield strength greater than 52ksi. Temperature control shall be verified with approved devices. No PWHT required.

BUTT WELD JOINT DESIGN

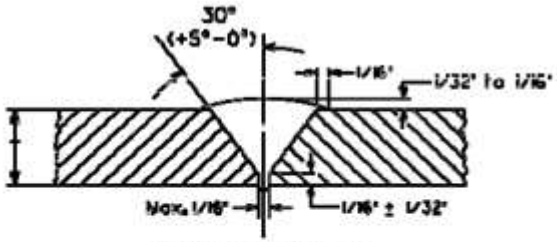

STANDARD "V" BEVEL BUTT JOINT

QUALIFIED JOINT DESIGN CONDITIONS

"V" groove composed of two 30 (+5 - 0) bevels with 1/16" spacing and 1/16" (+/- 1/32") land.

MINIMUM NO. OF PASSES

W.T. (in)	MIN. PASSES
≤ 0.250	3
> 0.250 ≤ 0.450	4
> 0.450 ≤ 0.650	5
> 0.650 ≤ 0.750	7

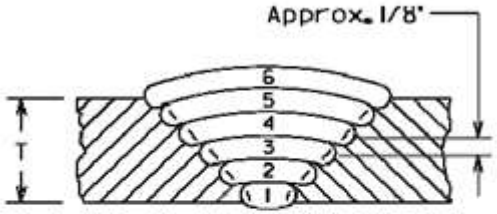

APPROVED FILLER METAL SELECTIONS

WALL THICK.	ELECTRODE SIZE BY PASS

ASSOCIATED ELECTRICAL CHARACTERISTICS

FILLER MATERIAL	WELDING PARAMETERS	TRAVEL

MATERIAL	E6010	E8010	E8010	E8010
0.188 - 0.237	1/8"	1/8"		5/32"
0.250 - 0.312	1/8", 5/32"	1/8", 5/32"	1/8", 5/32"	5/32", 3/16"
0.322 - 0.375	1/8", 5/32"	1/8", 5/32"	1/8", 5/32"	5/32", 3/16"
0.406 - 0.500				

1/8"	E6010	80 - 150	22 - 35	2 - 14
1/8"	E8010	80 - 120	20 - 31	2 - 14
5/32"	E6010	100 - 145	21 - 32	2 - 14
5/32"	E8010	80 - 150	19 - 33	2 - 14
3/16"	E8010	110 - 160	23 - 34	2 - 14

*Stripper/Fill as required using the parameters of filler pass selection and associated characteristics

[1] The filler metal shall conform to AWS filler metal group 2 and A5.5 specification utilizing an E8010-G or E8010-P1 electrode.

The procedure qualification was conducted in accordance with the requirements of the latest approved edition of API Standard 1104, CFR Title 49 Part 192 and Dominion Energy North Carolina and Dominion Energy South Carolina Engineering Specifications.

WPS SM-24 (click here for pdf version)

WPS No: SM-24

DATE: 5/1/2019

DESCRIPTION:	Butt joint groove welding procedure meeting the following requirements.		
WELDING PROCESS:	Manual Shielded Metal Arc (SMAW) using stick electrodes.		
PIPE AND FILLER MATERIAL REQUIREMENTS			
PIPE AND FITTING MATERIAL:	Steel pipe and fitting grades with yield strengths equal to 65,000 psi.		
DIAMETER AND WALL THICKNESS:	Over 12-3/4(12.750)" O.D. and 3/16(0.1875)" thru 3/4(0.750)" W.T.		
FILLER MATERIAL:	AWS E6010 root pass; AWS E8010[1] on remaining passes		
SHEILDING FLUX:	AWS cellulosic on all passes		
PRODUCTION WELDING CONDITIONS			
DIRECTION OF WELDING:	Downhill	CURRENT/POLARITY:	Direct Current; reverse polarity, electrode positive
WELDING TECHNIQUE:	Stringer	TEMP. MEASUREMENT:	Pyrometer or Tempil sticks
PIPE POSITION:	Pipe axis to be in a fixed position. Roll welding will be permitted provided proper alignment and support are maintained by use of skids or V-blocks to accommodate two or more full lengths of pipe preventing sag.		
NUMBER OF WELDERS:	Minimum two welders required for sizes 14" thru 26" O.D.; Three or four welders required for sizes greater than 26" O.D.; Root and hot pass welders shall be equal in number; Only one welder is required for roll or fabrication welding.		
TIME LAPSE BETWEEN PASSES:	Maximum time between the completion of the root pass and the start of the second shall be 5 minutes. Each pass must be completed in its entirety before subsequent passes are initiated.		
TYPE/REMOVAL OF LINE-UP CLAMP:	Approved external or internal clamps if required for alignment; 100 percent of root pass shall be completed before internal clamps are removed ; No less than 50 percent of root pass for external clamps		
CLEANING METHOD:	Use power and/or hand tools; remove all rust, dirt, and other foreign matter before starting weld; remove slag from bead surface before starting next bead; Root bead should be power ground as much as practical; All other passes should be power buffed as much as practical and power ground as needed; clean finished weld.		

PREHEAT AND POSTHEAT:	Preheat to 150°F min to 350°F max when the pipe has a temperature of 40°F or below, is wet, has a wall thickness over 0.500", a carbon equivalent over 0.40% or a yield strength greater than 52ksi. Temperature control shall be verified with approved devices. No PWHT required.

BUTT WELD JOINT DESIGN

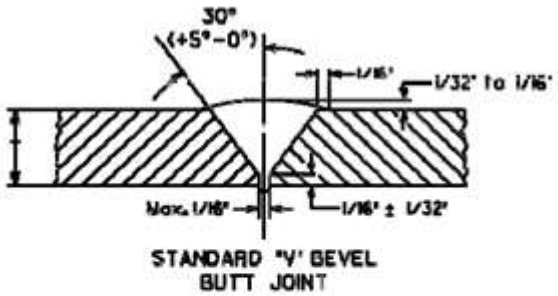

QUALIFIED JOINT DESIGN CONDITIONS

"V" groove composed of two 30 (+5 - 0) bevels with 1/16" spacing and 1/16" (+/- 1/32") land.

MINIMUM NO. OF PASSES

W.T. (in)	MIN. PASSES
≤ 0.250	3
> 0.250 ≤ 0.450	4
> 0.450 ≤ 0.650	5
> 0.650 ≤ 0.750	7

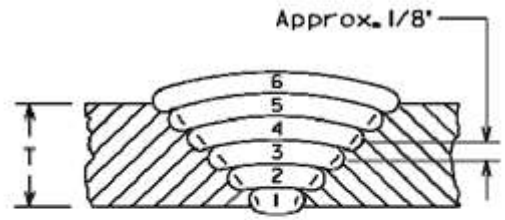

APPROVED FILLER METAL SELECTIONS

WALL THICK. (in)	ELECTRODE SIZE BY PASS			
	ROOT	HOT	FILLER(S)*	CAP(S)
MATERIAL	E6010	E8010	E8010	E8010
0.188 - 0.237				
0.250 - 0.312	1/8"	1/8", 5/32"	5/32", 3/16"	5/32", 3/16"
0.322 - 0.375	1/8", 5/32"	5/32", 3/16"	5/32", 3/16"	5/32", 3/16"
0.406 - 0.500	1/8", 5/32"	5/32", 3/16"	5/32", 3/16"	5/32", 3/16"

ASSOCIATED ELECTRICAL CHARACTERISTICS

FILLER MATERIAL		WELDING PARAMETERS		TRAVEL
SIZE	CLASSIFICATION	AMPERAGE	VOLTAGE	SPEED (IPM)
1/8"	E6010	90 - 170	28 - 51	2 - 14
1/8"	E8010	80 - 120	20 - 31	2 - 14
5/32"	E6010	115 - 200	20 - 52	2 - 14
5/32"	E8010	115 - 175	21 - 44	2 - 14
3/16"	E8010	105 - 215	22 - 54	2 - 14

*Stripper/Fill as required using the parameters of filler pass selection and associated characteristics

[1] The filler metal shall conform to AWS filler metal group 2 and A5.5 specification utilizing an E8010-G or E8010-P1 electrode.

The procedure qualification was conducted in accordance with the requirements of the latest approved edition of API Standard 1104, CFR Title 49 Part 192 and Dominion Energy North Carolina and Dominion Energy South Carolina Engineering Specifications.

WPS SM-30 (click here for pdf version)

WPS No: SM-30

DATE: 5/1/2019

DESCRIPTION:	Butt joint groove welding procedure meeting the following requirements.
WELDING PROCESS:	Manual Shielded Metal Arc (SMAW) using stick electrodes

PIPE AND FILLER MATERIAL REQUIREMENTS

PIPE AND FITTING MATERIAL:	Steel pipe and fitting grades with yield strengths equal to 70,000 psi.
DIAMETER AND WALL THICKNESS:	Over 12-3/4(12.750)" O.D. and 3/16(0.1875)" thru 3/4(0.750)" W.T.
FILLER MATERIAL:	AWS E6010 root pass; AWS E9010[1] on remaining passes
SHEILDING FLUX:	AWS cellulosic on all passes

PRODUCTION WELDING CONDITIONS

DIRECTION OF WELDING:	Downhill	CURRENT/POLARITY:	Direct Current; reverse polarity, electrode positive
WELDING TECHNIQUE:	Stringer	TEMP. MEASUREMENT:	Pyrometer or Tempil sticks
PIPE POSITION:	Pipe axis to be in a fixed position. Roll welding will be permitted provided proper alignment and support are maintained by use of skids or V-blocks to accommodate two or more full lengths of pipe preventing sag.		
NUMBER OF WELDERS:	Minimum two welders required for sizes 14" thru 26" O.D.; Three or four welders required for sizes greater than 26" O.D.; Root and hot pass welders shall be equal in number; Only one welder is required for roll or fabrication welding.		
TIME LAPSE BETWEEN PASSES:	Maximum time between the completion of the root pass and the start of the second shall be 5 minutes. Each pass must be completed in its entirety before subsequent passes are initiated.		
TYPE/REMOVAL OF LINE-UP CLAMP:	Approved external or internal clamps if required for alignment; 100 percent of root pass shall be completed before internal clamps are removed ; No less than 50 percent of root pass for external clamps		
CLEANING METHOD:	Use power and/or hand tools; remove all rust, dirt, and other foreign matter before starting weld; remove slag from bead surface before starting next bead; Root bead should be power ground as much as practical; All other passes should be power buffed as much as practical and power ground as needed; clean finished weld.		
PREHEAT AND POSTHEAT:	Preheat to 150°F Min to 350°F Max when the pipe has a temperature of 40°F or below, is wet, has a wall thickness over 0.500", a carbon equivalent over 0.40% or a yield strength greater than 52ksi. Temperature control shall be verified with approved devices. No PWHT required.		

BUTT WELD JOINT DESIGN

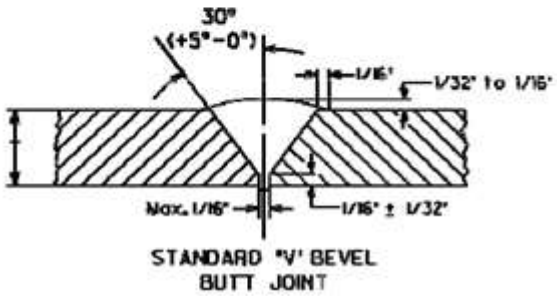

QUALIFIED JOINT DESIGN CONDITIONS

"V" groove composed of two 30 (+5 - 0) bevels with 1/16" spacing and 1/16" (+/- 1/32") land.

MINIMUM NO. OF PASSES

W.T. (in)	MIN. PASSES
≤ 0.250	3
> 0.250 ≤ 0.450	4
> 0.450 ≤ 0.650	5
> 0.650 ≤ 0.750	7

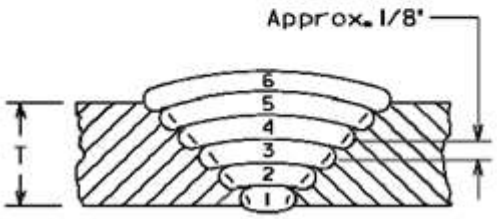

APPROVED FILLER METAL SELECTIONS

WALL THICK. (in)	ELECTRODE SIZE BY PASS			
	ROOT	HOT	FILLER(S)*	CAP(S)
MATERIAL	E6010	E9010	E9010	E9010
0.188 - 0.237				

ASSOCIATED ELECTRICAL CHARACTERISTICS

FILLER MATERIAL		WELDING PARAMETERS		TRAVEL
SIZE	CLASSIFICATION	AMPERAGE	VOLTAGE	SPEED (IPM)
1/8"	E6010	75 - 125	22 - 35	2 - 14
1/8"	E9010	85 - 120	20 - 31	2 - 14

0.322 - 0.375	1/8", 5/32"	5/32", 3/16"	5/32", 3/16"	5/32", 3/16"	5/32"	E9010	80 - 145	22 - 35	2 - 14
0.406 - 0.500	1/8", 5/32"	5/32", 3/16"	5/32", 3/16"	5/32", 3/16"	3/16"	E9010	115 - 165	23 - 34	2 - 14

*Stripper/Fill as required using the parameters of filler pass selection and associated characteristics

[1] The filler metal shall conform to AWS filler metal group 2 and A5.5 specification utilizing an E9010-G electrode.

The procedure qualification was conducted in accordance with the requirements of the latest approved edition of API Standard 1104, CFR Title 49 Part 192 and Dominion Energy North Carolina and Dominion Energy South Carolina Engineering Specifications.

WPS SM-51 (click here for pdf version)

WPS No: SM-51

DATE: 5/1/2019

DESCRIPTION:	Fillet welding procedure meeting the following requirements.		
WELDING PROCESS:	Manual Shielded Metal Arc (SMAW) using stick electrodes.		
PIPE AND FILLER MATERIAL REQUIREMENTS			
PIPE AND FITTING MATERIAL:	Steel pipe and fitting grades with yield strengths less than or equal to 42,000 psi.		
BRANCH DIAMETER AND WALL THICKNESS:	Less than 2-3/8(2.375)" O.D. and less than 3/16(0.1875)" W.T.		
FILLER MATERIAL:	AWS E6010 root pass; AWS E7010[1] on remaining passes (exception if using 3/32" E6010 on all passes)		
SHEILDING FLUX:	AWS cellulosic on all passes		
PRODUCTION WELDING CONDITIONS			
DIRECTION OF WELDING:	Downhill	CURRENT/POLARITY:	Direct Current; reverse polarity, electrode positive.
WELDING TECHNIQUE:	Stringer	TEMP. MEASUREMENT:	Pyrometer or Tempil sticks.
PIPE POSITION:	Pipe axis to be in a fixed position.		
FITTING POSITION:	Position fitting and tack sufficiently to prevent shifting/warping during welding process.		
NUMBER OF WELDERS:	One welder maximum.		
TIME LAPSE BETWEEN PASSES:	Maximum time between the completion of the root pass and the start of the second shall be 5 minutes. Each pass must be completed in its entirety before subsequent passes are initiated.		
TYPE/REMOVAL OF LINE-UP CLAMP:	Not applicable.		
CLEANING METHOD:	Use power and/or hand tools; remove all rust, dirt, and other foreign matter before starting weld; remove slag from bead surface before starting next bead; Root bead should be power ground as much as practical; All other passes should be power buffed as much as practical and power ground as needed; clean finished weld.		
PREHEAT AND POSTHEAT:	Preheat to 150°F Min to 350°F Max when the pipe has a temperature of 40°F or below, is wet, has a wall thickness over 0.500", a carbon equivalent over 0.40% or a yield strength greater than 52ksi. Temperature control shall be verified with approved devices. No PWHT required.		
BRANCH AND SOCKET FILLET WELD JOINT DESIGN			

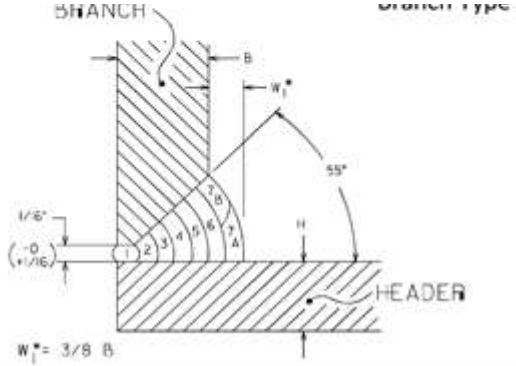

1. B or M to have MAOP ≥ Header.
2. Branch must be contoured to approx. curvature of Header.
3. Where M > H, the edges to be fillet welded shall be tapered to equal H while maintaining sufficient strength required by Condition 1.
4. Complete entire bead before starting next.
5. Minimum 1/4" overall dimension for weld widths W_1 and W_2.

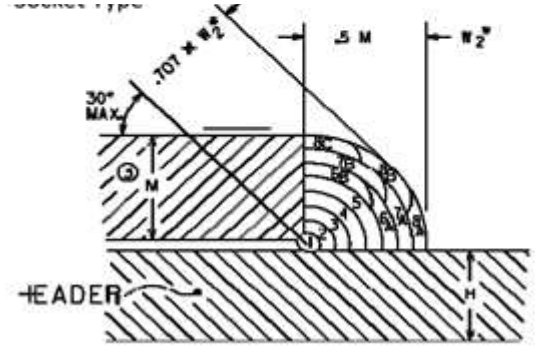

APPROVED FILLER METAL SELECTIONS				
WALL THICK. (in)	ELECTRODE SIZE BY PASS			
	ROOT	HOT	FILLER(S)*	CAP(S)
MATERIAL	E6010	E6010	E6010	E6010
ALL	3/32"	3/32"		3/32"
MATERIAL	E6010	E7010	E7010	E7010
ALL	1/8"	1/8"		1/8"

ASSOCIATED ELECTRICAL CHARACTERISTICS				
FILLER MATERIAL		WELDING PARAMETERS		TRAVEL
SIZE	CLASSIFICATION	AMPERAGE	VOLTAGE	SPEED (IPM)
3/32"	E6010	45 - 95	20 - 34	3 - 13
1/8"	E6010	60 - 100	22 - 35	3 - 13
1/8"	E7010	60 - 100	22 - 35	3 - 13

*Stripper/Fill as required using the parameters of filler pass selection and associated characteristics

[1] The filler metal shall conform to AWS filler metal group 1 and A5.5 specification utilizing an E7010-G or E7010-P1 electrode.

The procedure qualification was conducted in accordance with the requirements of the latest approved edition of API Standard 1104, CFR Title 49 Part 192 and Dominion Energy North Carolina and Dominion Energy South Carolina Engineering Specifications.

WPS SM-52 (click here for pdf version)

WPS No: SM-52

DATE: 5/1/2019

DESCRIPTION:	Fillet welding procedure meeting the following requirements.
WELDING PROCESS:	Manual Shielded Metal Arc (SMAW) using stick electrodes.
PIPE AND FILLER MATERIAL REQUIREMENTS	
PIPE AND FITTING MATERIAL:	Steel pipe and fitting grades with yield strengths less than or equal to 42,000 psi.

FILLER MATERIAL:	AWS E6010 root pass; AWS E7010[1] on remaining passes (exception if using 3/32" E6010 on all passes)
SHEILDING FLUX:	AWS cellulosic on all passes

PRODUCTION WELDING CONDITIONS

DIRECTION OF WELDING:	Downhill	CURRENT/POLARITY:	Direct Current; reverse polarity, electrode positive.
WELDING TECHNIQUE:	Stringer	TEMP. MEASUREMENT:	Pyrometer or Tempil sticks.
PIPE POSITION:	Pipe axis to be in a fixed position.		
FITTING POSITION:	Position fitting and tack sufficiently to prevent shifting/warping during welding process.		
NUMBER OF WELDERS:	One welder maximum.		
TIME LAPSE BETWEEN PASSES:	Maximum time between the completion of the root pass and the start of the second shall be 5 minutes. Each pass must be completed in its entirety before subsequent passes are initiated.		
TYPE/REMOVAL OF LINE-UP CLAMP:	Not applicable.		
CLEANING METHOD:	Use power and/or hand tools; remove all rust, dirt, and other foreign matter before starting weld; remove slag from bead surface before starting next bead; Root bead should be power ground as much as practical; All other passes should be power buffed as much as practical and power ground as needed; clean finished weld.		
PREHEAT AND POSTHEAT:	Preheat to 150°F Min to 350°F Max when the pipe has a temperature of 40°F or below, is wet, has a wall thickness over 0.500", a carbon equivalent over 0.40% or a yield strength greater than 52ksi. Temperature control shall be verified with approved devices. No PWHT required.		

BRANCH AND SOCKET FILLET WELD JOINT DESIGN

Branch Type

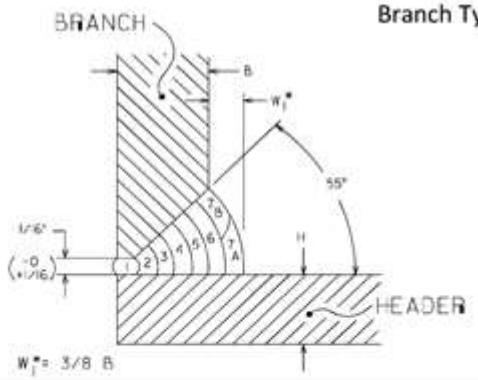

QUALIFIED JOINT DESIGN CONDITIONS

1. B or M to have MAOP ≥ Header.
2. Branch must be contoured to approx. curvature of Header.
3. Where M > H, the edges to be fillet welded shall be tapered to equal H while maintaining sufficient strength required by Condition 1.
4. Complete entire bead before starting next.
5. Minimum 1/4" overall dimension for weld widths W_1 and W_2.

Socket Type

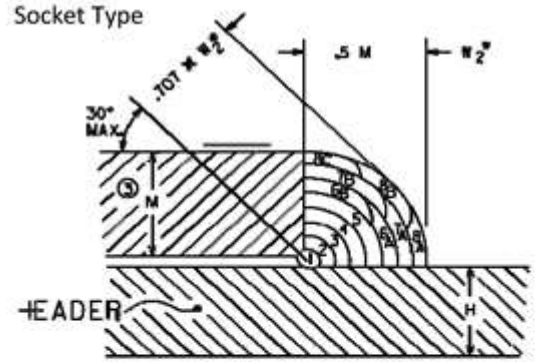

APPROVED FILLER METAL SELECTIONS

WALL THICK. (in)	ELECTRODE SIZE BY PASS			
	ROOT	HOT	FILLER(S)*	CAP(S)
MATERIAL	E6010	E6010	E6010	E6010
ALL	3/32"	3/32"	3/32"	3/32"
MATERIAL	E6010	E7010	E7010	E7010
ALL	1/8"	1/8"	1/8"	1/8"

ASSOCIATED ELECTRICAL CHARACTERISTICS

FILLER MATERIAL		WELDING PARAMETERS		TRAVEL
SIZE	CLASSIFICATION	AMPERAGE	VOLTAGE	SPEED (IPM)
3/32"	E6010	45 - 95	20 - 34	3 - 13
1/8"	E6010	70 - 110	21 - 33	3 - 13
1/8"	E7010	55 - 115	22 - 34	3 - 13

*Stripper/Fill as required using the parameters of filler pass selection and associated characteristics

[1] The filler metal shall conform to AWS filler metal group 1 and A5.5 specification utilizing an E7010-G or E7010-P1 electrode.

The procedure qualification was conducted in accordance with the requirements of the latest approved edition of API Standard 1104, CFR Title 49 Part 192 and Dominion Energy North Carolina and Dominion Energy South Carolina Engineering Specifications.

WPS SM-53 (click here for pdf version)

WPS No: SM-53

DATE: 5/1/2019

DESCRIPTION:	Fillet welding procedure meeting the following requirements.
WELDING PROCESS:	Manual Shielded Metal Arc (SMAW) using stick electrodes.

PIPE AND FILLER MATERIAL REQUIREMENTS

PIPE AND FITTING MATERIAL:	Steel pipe and fitting grades with yield strengths less than or equal to 42,000 psi.
BRANCH DIAMETER AND WALL THICKNESS:	2-3/8(2.375)" thru 12-3/4(12.750)" O.D. and less than 3/16(0.1875)" W.T.
FILLER MATERIAL:	AWS E6010 root pass; AWS E7010[1] on remaining passes.
SHEILDING FLUX:	AWS cellulosic on all passes

PRODUCTION WELDING CONDITIONS

DIRECTION OF WELDING:	Downhill	CURRENT/POLARITY:	Direct Current; reverse polarity, electrode positive.
WELDING TECHNIQUE:	Stringer	TEMP. MEASUREMENT:	Pyrometer or Tempil sticks.

PIPE POSITION:	Pipe axis to be in a fixed position.
FITTING POSITION:	Position fitting and tack sufficiently to prevent shifting/warping during welding process.
NUMBER OF WELDERS:	One or two welders as needed; Root and hot pass welders shall be equal in number; Only one welder is required for roll or fabrication welding.
TIME LAPSE BETWEEN PASSES:	Maximum time between the completion of the root pass and the start of the second shall be 5 minutes. Each pass must be completed in its entirety before subsequent passes are initiated.
TYPE/REMOVAL OF LINE-UP CLAMP:	Not applicable.
CLEANING METHOD:	Use power and/or hand tools; remove all rust, dirt, and other foreign matter before starting weld; remove slag from bead surface before starting next bead; Root bead should be power ground as much as practical; All other passes should be power buffed as much as practical and power ground as needed; clean finished weld.
PREHEAT AND POSTHEAT:	Preheat to 150°F Min to 350°F Max when the pipe has a temperature of 40°F or below, is wet, has a wall thickness over 0.500", a carbon equivalent over 0.40% or a yield strength greater than 52ksi. Temperature control shall be verified with approved devices. No PWHT required.

BRANCH AND SOCKET FILLET WELD JOINT DESIGN

Branch Type

QUALIFIED JOINT DESIGN CONDITIONS
1. B or M to have MAOP ≥ Header.
2. Branch must be contoured to approx.

Socket Type

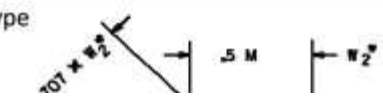

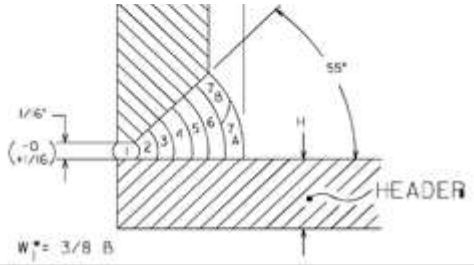

3. Where M > H, the edges to be fillet welded shall be tapered to equal H while maintaining sufficient strength required by Condition 1.

4. Complete entire bead before starting next.

5. Minimum 1/4" overall dimension for weld widths W_1 and W_2.

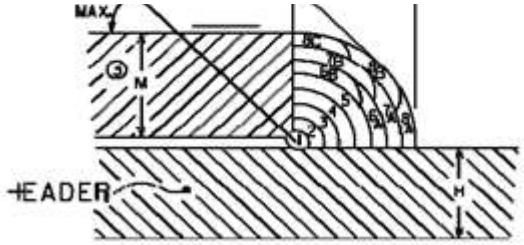

APPROVED FILLER METAL SELECTIONS				
WALL THICK.	ELECTRODE SIZE BY PASS			
(in)	ROOT	HOT	FILLER(S)*	CAP(S)
MATERIAL	E6010	E7010	E7010	E7010
ALL	1/8"	1/8"	1/8", 5/32"	1/8", 5/32"

ASSOCIATED ELECTRICAL CHARACTERISTICS				
FILLER MATERIAL		WELDING PARAMETERS		TRAVEL
SIZE	CLASSIFICATION	AMPERAGE	VOLTAGE	SPEED (IPM)
1/8"	E6010	90 - 145	23 - 36	3 - 13
1/8"	E7010	50 - 115	21 - 36	3 - 13
5/32"	E7010	75 - 115	23 - 34	3 - 13

*Stripper/Fill as required using the parameters of filler pass selection and associated characteristics

[1] The filler metal shall conform to AWS filler metal group 1 and A5.5 specification utilizing an E7010-G or E7010-P1 electrode.

The procedure qualification was conducted in accordance with the requirements of the latest approved edition of API Standard 1104, CFR Title 49 Part 192 and Dominion Energy North Carolina and Dominion Energy South Carolina Engineering Specifications.

WPS SM-54 (click here for pdf version)

WPS No: SM-54

DATE: 5/1/2019

DESCRIPTION:	Fillet welding procedure meeting the following requirements.
WELDING PROCESS:	Manual Shielded Metal Arc (SMAW) using stick electrodes.
PIPE AND FILLER MATERIAL REQUIREMENTS	
PIPE AND FITTING MATERIAL:	Steel pipe and fitting grades with yield strengths less than or equal to 42,000 psi.
BRANCH DIAMETER AND WALL THICKNESS:	2-3/8(2.375)" thru 12-3/4(12.750)" O.D. and 3/16(0.1875)" thru 3/4(0.750)" W.T.
FILLER MATERIAL:	AWS E6010 root pass; AWS E7010[1] on remaining passes.
SHEILDING FLUX:	AWS cellulosic on all passes
PRODUCTION WELDING CONDITIONS	

DIRECTION OF WELDING:	Downhill	CURRENT/POLARITY:	Direct current; reverse polarity, electrode positive.
WELDING TECHNIQUE:	Stringer	TEMP. MEASUREMENT:	Pyrometer or Tempil sticks.
PIPE POSITION:	Pipe axis to be in a fixed position.		
FITTING POSITION:	Position fitting and tack sufficiently to prevent shifting/warping during welding process.		
NUMBER OF WELDERS:	One or two welders as needed; Root and hot pass welders shall be equal in number; Only one welder is required for roll or fabrication welding.		
TIME LAPSE BETWEEN PASSES:	Maximum time between the completion of the root pass and the start of the second shall be 5 minutes. Each pass must be completed in its entirety before subsequent passes are initiated.		
TYPE/REMOVAL OF LINE-UP CLAMP:	Not applicable.		
CLEANING METHOD:	Use power and/or hand tools; remove all rust, dirt, and other foreign matter before starting weld; remove slag from bead surface before starting next bead; Root bead should be power ground as much as practical; All other passes should be power buffed as much as practical and power ground as needed; clean finished weld.		
PREHEAT AND POSTHEAT:	Preheat to 150°F Min to 350°F Max when the pipe has a temperature of 40°F or below, is wet, has a wall thickness over 0.500", a carbon equivalent over 0.40% or a yield strength greater than 52ksi. Temperature control shall be verified with approved devices. No PWHT required.		

BRANCH AND SOCKET FILLET WELD JOINT DESIGN

Branch Type

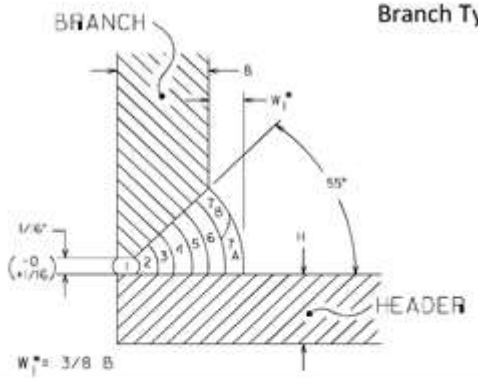

QUALIFIED JOINT DESIGN CONDITIONS

1. B or M to have MAOP ≥ Header.
2. Branch must be contoured to approx. curvature of Header.
3. Where M > H, the edges to be fillet welded shall be tapered to equal H while maintaining sufficient strength required by Condition 1.
4. Complete entire bead before starting next.
5. Minimum 1/4" overall dimension for weld widths W_1 and W_2.

Socket Type

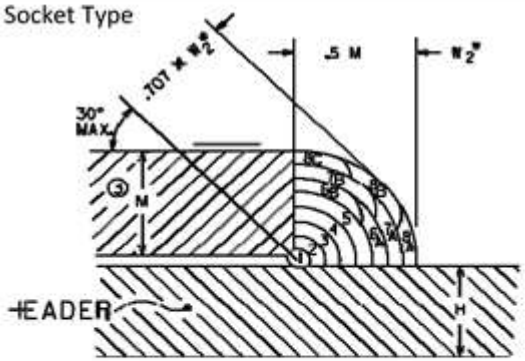

APPROVED FILLER METAL SELECTIONS

WALL THICK. (in)	ELECTRODE SIZE BY PASS			
	ROOT	HOT	FILLER(S)*	CAP(S)
MATERIAL	E6010	E7010	E7010	E7010
ALL	1/8"	1/8"	1/8", 5/32"	1/8", 5/32"

ASSOCIATED ELECTRICAL CHARACTERISTICS

FILLER MATERIAL		WELDING PARAMETERS		TRAVEL
SIZE	CLASSIFICATION	AMPERAGE	VOLTAGE	SPEED (IPM)
1/8"	E6010	70 - 120	24 - 36	3 - 13
1/8"	E7010	65 - 110	23 - 34	3 - 13
5/32"	E7010	75 - 155	22 - 35	3 - 13

*Stripper/Fill as required using the parameters of filler pass selection and associated characteristics

[1] The filler metal shall conform to AWS filler metal group 1 and A5.5 specification utilizing an E7010-G or E7010-P1 electrode.

The procedure qualification was conducted in accordance with the requirements of the latest approved edition of API Standard 1104, CFR Title 49 Part 192

WPS SM-58 (click here for pdf version)

WPS No: SM-58

DATE: 5/1/2019

DESCRIPTION:	Fillet welding procedure meeting the following requirements.
WELDING PROCESS:	Manual Shielded Metal Arc (SMAW) using stick electrodes.

PIPE AND FILLER MATERIAL REQUIREMENTS

PIPE AND FITTING MATERIAL:	Steel pipe and fitting grades with yield strengths greater than 42,000psi but less than or equal to 52,000 psi.
BRANCH DIAMETER AND WALL THICKNESS:	Less than 2-3/8(2.375)" O.D. and 3/16(0.1875)" thru 3/4(0.750)" W.T.
FILLER MATERIAL:	AWS E6010 root pass; AWS E7010[1] on remaining passes (exception if using 3/32" E6010 on all passes)
SHEILDING FLUX:	AWS cellulosic on all passes

PRODUCTION WELDING CONDITIONS

DIRECTION OF WELDING:	Downhill	CURRENT/POLARITY:	Direct Current; reverse polarity, electrode positive.
WELDING TECHNIQUE:	Stringer	TEMP. MEASUREMENT:	Pyrometer or Tempil sticks.

PIPE POSITION:	Pipe axis to be in a fixed position.
FITTING POSITION:	Position fitting and tack sufficiently to prevent shifting/warping during welding process.
NUMBER OF WELDERS:	One welder maximum.
TIME LAPSE BETWEEN PASSES:	Maximum time between the completion of the root pass and the start of the second shall be 5 minutes. Each pass must be completed in its entirety before subsequent passes are initiated.
TYPE/REMOVAL OF LINE-UP CLAMP:	Not applicable.
CLEANING METHOD:	Use power and/or hand tools; remove all rust, dirt, and other foreign matter before starting weld; remove slag from bead surface before starting next bead; Root bead should be power ground as much as practical; All other passes should be power buffed as much as practical and power ground as needed; clean finished weld.
PREHEAT AND POSTHEAT:	Preheat to 150°F Min to 350°F Max when the pipe has a temperature of 40°F or below, is wet, has a wall thickness over 0.500", a carbon equivalent over 0.40% or a yield strength greater than 52ksi. Temperature control shall be verified with approved devices. No PWHT required.

BRANCH AND SOCKET FILLET WELD JOINT DESIGN

Branch Type

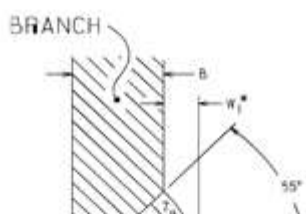

QUALIFIED JOINT DESIGN CONDITIONS

1. B or M to have MAOP ≥ Header.
2. Branch must be contoured to approx. curvature of Header.
3. Where M > H, the edges to be fillet welded shall be tapered to equal H while maintaining sufficient strength required by Condition 1.

Socket Type

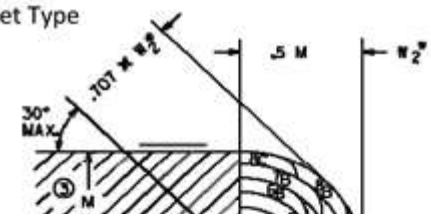

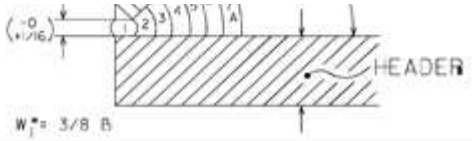

4. Complete entire bead before starting next.

5. Minimum 1/4" overall dimension for weld widths W_1 and W_2.

APPROVED FILLER METAL SELECTIONS				
WALL THICK. (in)	ELECTRODE SIZE BY PASS			
	ROOT	HOT	FILLER(S)*	CAP(S)
MATERIAL	E6010	E6010	E6010	E6010
ALL	3/32"	3/32"	3/32"	3/32"
MATERIAL	E6010	E7010	E7010	E7010
ALL	1/8"	1/8"	1/8"	1/8"

ASSOCIATED ELECTRICAL CHARACTERISTICS				
FILLER MATERIAL		WELDING PARAMETERS		TRAVEL
SIZE	CLASSIFICATION	AMPERAGE	VOLTAGE	SPEED (IPM)
3/32"	E6010	45 - 95	20 - 34	3 - 13
1/8"	E6010	60 - 110	20 - 31	3 - 13
1/8"	E7010	65 - 110	20 - 31	3 - 13

*Stripper/Fill as required using the parameters of filler pass selection and associated characteristics

[1] The filler metal shall conform to AWS filler metal group 1 and A5.5 specification utilizing an E7010-G or E7010-P1 electrode.

The procedure qualification was conducted in accordance with the requirements of the latest approved edition of API Standard 1104, CFR Title 49 Part 192 and Dominion Energy North Carolina and Dominion Energy South Carolina Engineering Specifications.

WPS SM-60 (click here for pdf version)

WPS No: SM-60

DATE: 5/1/2019

DESCRIPTION:	Fillet welding procedure meeting the following requirements.
WELDING PROCESS:	Manual Shielded Metal Arc (SMAW) using stick electrodes.
PIPE AND FILLER MATERIAL REQUIREMENTS	
PIPE AND FITTING MATERIAL:	Steel pipe and fitting grades with yield strengths greater than 42,000psi but less than or equal to 52,000 psi.
BRANCH DIAMETER AND WALL THICKNESS:	2-3/8(2.375)" thru 12-3/4(12.750)" O.D. and 3/16(0.1875)" thru 3/4(0.750)" W.T.
FILLER MATERIAL:	AWS E6010 root pass; AWS E7010[1] on remaining passes.
SHEILDING FLUX:	AWS cellulosic on all passes

PRODUCTION WELDING CONDITIONS			
DIRECTION OF WELDING:	Downhill	CURRENT/POLARITY:	Direct Current; reverse polarity, electrode positive.
WELDING TECHNIQUE:	Stringer	TEMP. MEASUREMENT:	Pyrometer or Tempil sticks.
PIPE POSITION:	Pipe axis to be in a fixed position.		

NUMBER OF WELDERS:	One or two welders as needed; Root and hot pass welders shall be equal in number; Only one welder is required for roll or fabrication welding.
TIME LAPSE BETWEEN PASSES:	Maximum time between the completion of the root pass and the start of the second shall be 5 minutes. Each pass must be completed in its entirety before subsequent passes are initiated.
TYPE/REMOVAL OF LINE-UP CLAMP:	Not applicable.
CLEANING METHOD:	Use power and/or hand tools; remove all rust, dirt, and other foreign matter before starting weld; remove slag from bead surface before starting next bead; Root bead should be power ground as much as practical; All other passes should be power buffed as much as practical and power ground as needed; clean finished weld.
PREHEAT AND POSTHEAT:	Preheat to 150°F Min to 350°F Max when the pipe has a temperature of 40°F or below, is wet, has a wall thickness over 0.500", a carbon equivalent over 0.40% or a yield strength greater than 52ksi. Temperature control shall be verified with approved devices. No PWHT required.

BRANCH AND SOCKET FILLET WELD JOINT DESIGN

Branch Type

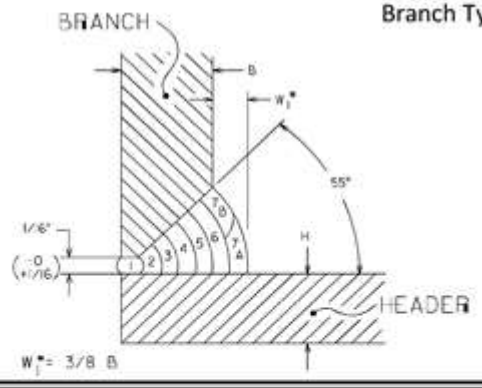

QUALIFIED JOINT DESIGN CONDITIONS

1. B or M to have MAOP ≥ Header.
2. Branch must be contoured to approx. curvature of Header.
3. Where M > H, the edges to be fillet welded shall be tapered to equal H while maintaining sufficient strength required by Condition 1.
4. Complete entire bead before starting next.
5. Minimum 1/4" overall dimension for weld widths W_1 and W_2.

Socket Type

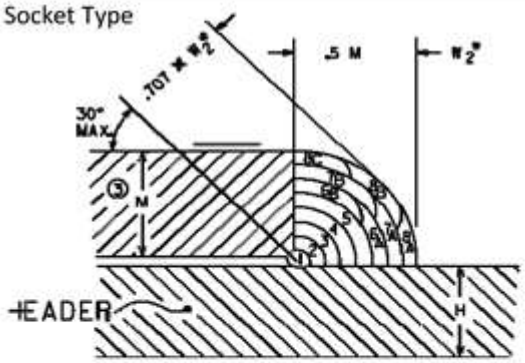

APPROVED FILLER METAL SELECTIONS

WALL THICK. (in)	ELECTRODE SIZE BY PASS			
	ROOT	HOT	FILLER(S)*	CAP(S)
MATERIAL	E6010	E7010	E7010	E7010
ALL	1/8"	1/8", 5/32"	1/8", 5/32"	1/8", 5/32"

ASSOCIATED ELECTRICAL CHARACTERISTICS

FILLER MATERIAL		WELDING PARAMETERS		TRAVEL
SIZE	CLASSIFICATION	AMPERAGE	VOLTAGE	SPEED (IPM)
1/8"	E6010	75 - 105	22 - 34	3 - 13
1/8"	E7010	75 - 115	24 - 36	3 - 13
5/32"	E7010	75 - 115	24 - 35	3 - 13

*Stripper/Fill as required using the parameters of filler pass selection and associated characteristics

[1] The filler metal shall conform to AWS filler metal group 1 and A5.5 specification utilizing an E7010-G or E7010-P1 electrode.

The procedure qualification was conducted in accordance with the requirements of the latest approved edition of API Standard 1104, CFR Title 49 Part 192 and Dominion Energy North Carolina and Dominion Energy South Carolina Engineering Specifications.

WPS SM-62 (click here for pdf version)

WPS No: SM-62

DATE: 5/1/2019

DESCRIPTION:	Fillet welding procedure meeting the following requirements.
WELDING PROCESS:	Manual Shielded Metal Arc (SMAW) using stick electrodes.

PIPE AND FILLER MATERIAL REQUIREMENTS

PIPE AND FITTING MATERIAL:	Steel pipe and fitting grades with yield strengths greater than 42,000psi but less than or equal to 52,000 psi.
BRANCH DIAMETER AND WALL THICKNESS:	Over 12-3/4(12.750)" O.D. and 3/16(0.1875)" thru 3/4(0.750)" W.T.
FILLER MATERIAL:	AWS E6010 root pass; AWS E7010[1] on remaining passes.
SHEILDING FLUX:	AWS cellulosic on all passes

PRODUCTION WELDING CONDITIONS

DIRECTION OF WELDING:	Downhill	CURRENT/POLARITY:	Direct Current; reverse polarity, electrode positive.
WELDING TECHNIQUE:	Stringer	TEMP. MEASUREMENT:	Pyrometer or Tempil sticks.
PIPE POSITION:	Pipe axis to be in a fixed position.		
FITTING POSITION:	Position fitting and tack sufficiently to prevent shifting/warping during welding process.		
NUMBER OF WELDERS:	Minimum two welders required for sizes 14" thru 26" O.D.; Three or four welders required for sizes greater than 26" O.D.; Root and hot pass welders shall be equal in number; Only one welder is required for roll or fabrication welding.		
TIME LAPSE BETWEEN PASSES:	Maximum time between the completion of the root pass and the start of the second shall be 5 minutes. Each pass must be completed in its entirety before subsequent passes are initiated.		
TYPE/REMOVAL OF LINE-UP CLAMP:	Not applicable.		
CLEANING METHOD:	Use power and/or hand tools; remove all rust, dirt, and other foreign matter before starting weld; remove slag from bead surface before starting next bead; Root bead should be power ground as much as practical; All other passes should be power buffed as much as practical and power ground as needed; clean finished weld.		
PREHEAT AND POSTHEAT:	Preheat to 150°F Min to 350°F Max when the pipe has a temperature of 40°F or below, is wet, has a wall thickness over 0.500", a carbon equivalent over 0.40% or a yield strength greater than 52ksi. Temperature control shall be verified with approved devices. No PWHT required.		

BRANCH AND SOCKET FILLET WELD JOINT DESIGN

Branch Type

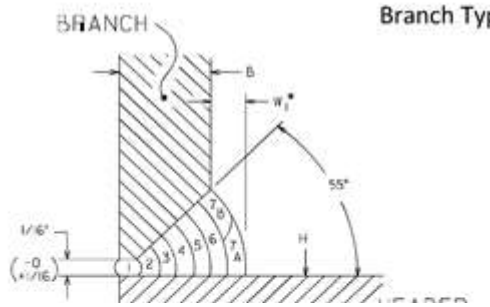

QUALIFIED JOINT DESIGN CONDITIONS

1. B or M to have MAOP ≥ Header.
2. Branch must be contoured to approx. curvature of Header.
3. Where M > H, the edges to be fillet welded shall be tapered to equal H while maintaining sufficient strength required by Condition 1.
4. Complete entire bead before starting next.

Socket Type

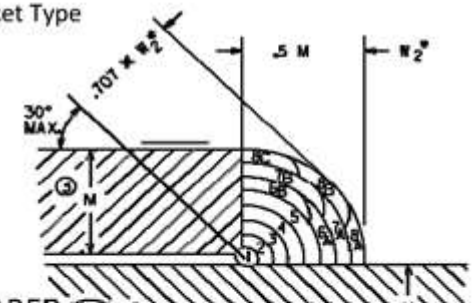

W*= 3/8 B

5. Minimum 1/4" overall dimension for weld widths W_1 and W_2.

APPROVED FILLER METAL SELECTIONS				
WALL THICK. (in)	ELECTRODE SIZE BY PASS			
	ROOT	HOT	FILLER(S)*	CAP(S)
MATERIAL	E6010	E7010	E7010	E7010
ALL	5/32"	5/32"	5/32", 3/16"	5/32", 3/16"

ASSOCIATED ELECTRICAL CHARACTERISTICS				
FILLER MATERIAL		WELDING PARAMETERS		TRAVEL
SIZE	CLASSIFICATION	AMPERAGE	VOLTAGE	SPEED (IPM)
5/32"	E6010	70 - 185	22 - 38	3 - 13
5/32"	E7010	100 - 145	20 - 32	3 - 13
3/16"	E7010	120 - 200	22 - 38	3 - 13

*Stripper/Fill as required using the parameters of filler pass selection and associated characteristics

[1] The filler metal shall conform to AWS filler metal group 1 and A5.5 specification utilizing an E7010-G or E7010-P1 electrode.

The procedure qualification was conducted in accordance with the requirements of the latest approved edition of API Standard 1104, CFR Title 49 Part 192 and Dominion Energy North Carolina and Dominion Energy South Carolina Engineering Specifications.

WPS SM-64 (click here for pdf version)

WPS No: SM-64

DATE: 5/1/2019

DESCRIPTION:	Fillet welding procedure meeting the following requirements.
WELDING PROCESS:	Manual Shielded Metal Arc (SMAW) using stick electrodes.
PIPE AND FILLER MATERIAL REQUIREMENTS	
PIPE AND FITTING MATERIAL:	Steel pipe and fitting grades with yield strengths greater than 52,000psi but less than or equal to 60,000 psi.
BRANCH DIAMETER AND WALL THICKNESS:	Less than 2-3/8(2.375)" O.D. and 3/16(0.1875)" thru 3/4(0.750)" W.T.
FILLER MATERIAL:	AWS E6010 root pass; AWS E8010[1] on remaining passes (exception if using 3/32" E6010 on all passes)
SHEILDING FLUX:	AWS cellulosic on all passes

PRODUCTION WELDING CONDITIONS			
DIRECTION OF WELDING:	Downhill	CURRENT/POLARITY:	Direct Current; reverse polarity, electrode positive.
WELDING TECHNIQUE:	Stringer	TEMP. MEASUREMENT:	Pyrometer or Tempil sticks.
PIPE POSITION:	Pipe axis to be in a fixed position.		
FITTING POSITION:	Position fitting and tack sufficiently to prevent shifting/warping during welding process.		
NUMBER OF WELDERS:	One welder maximum.		
TIME LAPSE BETWEEN PASSES:	Maximum time between the completion of the root pass and the start of the second shall be 5 minutes. Each pass		

TYPE/REMOVAL OF LINE-UP CLAMP:	Not applicable.
CLEANING METHOD:	Use power and/or hand tools; remove all rust, dirt, and other foreign matter before starting weld; remove slag from bead surface before starting next bead; Root bead should be power ground as much as practical; All other passes should be power buffed as much as practical and power ground as needed; clean finished weld.
PREHEAT AND POSTHEAT:	Preheat to 150°F Min to 350°F Max when the pipe has a temperature of 40°F or below, is wet, has a wall thickness over 0.500", a carbon equivalent over 0.40% or a yield strength greater than 52ksi. Temperature control shall be verified with approved devices. No PWHT required.

BRANCH AND SOCKET FILLET WELD JOINT DESIGN

Branch Type

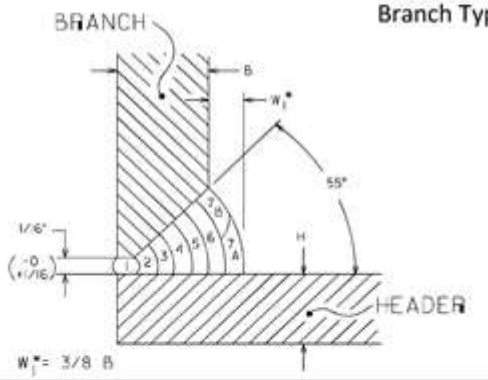

QUALIFIED JOINT DESIGN CONDITIONS

1. B or M to have MAOP ≥ Header.
2. Branch must be contoured to approx. curvature of Header.
3. Where M > H, the edges to be fillet welded shall be tapered to equal H while maintaining sufficient strength required by Condition 1.
4. Complete entire bead before starting next.
5. Minimum 1/4" overall dimension for weld widths W_1 and W_2.

Socket Type

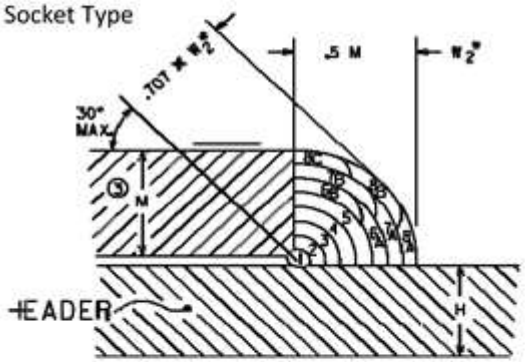

APPROVED FILLER METAL SELECTIONS

WALL THICK. (in)	ELECTRODE SIZE BY PASS			
	ROOT	HOT	FILLER(S)*	CAP(S)
MATERIAL	E6010	E6010	E6010	E6010
ALL	3/32"	3/32"	3/32"	3/32"
MATERIAL	E6010	E8010	E8010	E8010
ALL	1/8"	1/8"	1/8"	1/8"

ASSOCIATED ELECTRICAL CHARACTERISTICS

FILLER MATERIAL		WELDING PARAMETERS		TRAVEL
SIZE	CLASSIFICATION	AMPERAGE	VOLTAGE	SPEED (IPM)
3/32"	E6010	45 - 95	20 - 34	3 - 13
1/8"	E6010	60 - 110	20 - 33	3 - 13
1/8"	E8010	70 - 120	18 - 30	3 - 13

*Stripper/Fill as required using the parameters of filler pass selection and associated characteristics

[1] The filler metal shall conform to AWS filler metal group 2 and A5.5 specification utilizing an E8010-G or E8010-P1 electrode.

The procedure qualification was conducted in accordance with the requirements of the latest approved edition of API Standard 1104, CFR Title 49 Part 192 and Dominion Energy North Carolina and Dominion Energy South Carolina Engineering Specifications.

WPS SM-66 (click here for pdf version)

WPS No: SM-66

DATE: 5/1/2019

DESCRIPTION:	Fillet welding procedure meeting the following requirements.
WELDING PROCESS:	Manual Shielded Metal Arc (SMAW) using stick electrodes.

PIPE AND FILLER MATERIAL REQUIREMENTS

PIPE AND FITTING MATERIAL:	Steel pipe and fitting grades with yield strengths greater than 52,000psi but less than or equal to 60,000 psi.
BRANCH DIAMETER AND WALL THICKNESS:	2-3/8(2.375)" thru 12-3/4(12.750)" O.D. and 3/16(0.1875)" thru 3/4(0.750)" W.T.
FILLER MATERIAL:	AWS E6010 root pass; AWS E8010[1] on remaining passes
SHEILDING FLUX:	AWS cellulosic on all passes

PRODUCTION WELDING CONDITIONS

DIRECTION OF WELDING:	Downhill	CURRENT/POLARITY:	Direct Current; reverse polarity, electrode positive.
WELDING TECHNIQUE:	Stringer	TEMP. MEASUREMENT:	Pyrometer or Tempil sticks.
PIPE POSITION:	Pipe axis to be in a fixed position.		
FITTING POSITION:	Position fitting and tack sufficiently to prevent shifting/warping during welding process.		
NUMBER OF WELDERS:	One or two welders as needed; Root and hot pass welders shall be equal in number; Only one welder is required for roll or fabrication welding.		
TIME LAPSE BETWEEN PASSES:	Maximum time between the completion of the root pass and the start of the second shall be 5 minutes. Each pass must be completed in its entirety before subsequent passes are initiated.		
TYPE/REMOVAL OF LINE-UP CLAMP:	Not applicable.		
CLEANING METHOD:	Use power and/or hand tools; remove all rust, dirt, and other foreign matter before starting weld; remove slag from bead surface before starting next bead; Root bead should be power ground as much as practical; All other passes should be power buffed as much as practical and power ground as needed; clean finished weld.		
PREHEAT AND POSTHEAT:	Preheat to 150°F Min to 350°F Max when the pipe has a temperature of 40°F or below, is wet, has a wall thickness over 0.500", a carbon equivalent over 0.40% or a yield strength greater than 52ksi. Temperature control shall be verified with approved devices. No PWHT required.		

BRANCH AND SOCKET FILLET WELD JOINT DESIGN

Branch Type

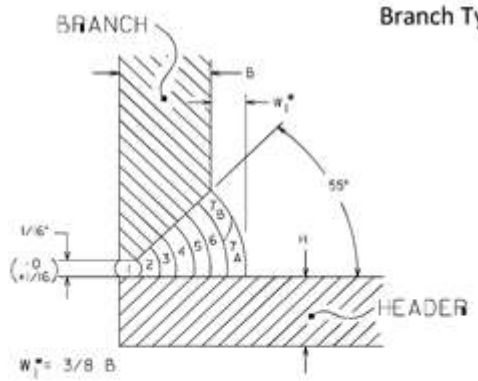

QUALIFIED JOINT DESIGN CONDITIONS

1. B or M to have MAOP ≥ Header.
2. Branch must be contoured to approx. curvature of Header.
3. Where M > H, the edges to be fillet welded shall be tapered to equal H while maintaining sufficient strength required by Condition 1.
4. Complete entire bead before starting next.
5. Minimum 1/4" overall dimension for weld widths W_1 and W_2.

Socket Type

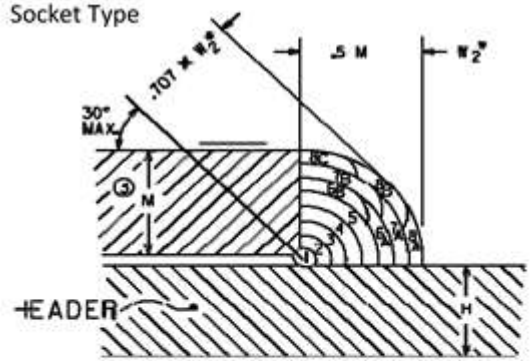

WALL THICK. (in)	ELECTRODE SIZE BY PASS			
	ROOT	HOT	FILLER(S)*	CAP(S)
MATERIAL	E6010	E8010	E8010	E8010
ALL	1/8"	1/8"	1/8", 5/32"	1/8", 5/32"

FILLER MATERIAL		WELDING PARAMETERS		TRAVEL
SIZE	CLASSIFICATION	AMPERAGE	VOLTAGE	SPEED (IPM)
1/8"	E6010	80 - 150	22 - 38	3 - 13
1/8"	E8010	80 - 150	20 - 38	3 - 13
5/32"	E8010	100 - 170	20 - 40	3 - 13

*Stripper/Fill as required using the parameters of filler pass selection and associated characteristics

[1] The filler metal shall conform to AWS filler metal group 2 and A5.5 specification utilizing an E8010-G or E8010-P1 electrode.

The procedure qualification was conducted in accordance with the requirements of the latest approved edition of API Standard 1104, CFR Title 49 Part 192 and Dominion Energy North Carolina and Dominion Energy South Carolina Engineering Specifications.

WPS SM-68 (click here for pdf version)

WPS No: SM-68

DATE: 5/1/2019

DESCRIPTION:	Fillet welding procedure meeting the following requirements.		
WELDING PROCESS:	Manual Shielded Metal Arc (SMAW) using stick electrodes.		
PIPE AND FILLER MATERIAL REQUIREMENTS			
PIPE AND FITTING MATERIAL:	Steel pipe and fitting grades with yield strengths greater than 52,000psi but less than or equal to 60,000 psi.		
BRANCH DIAMETER AND WALL THICKNESS:	Over 12-3/4(12.750)" O.D. and 3/16(0.1875)" thru 3/4(0.750)" W.T.		
FILLER MATERIAL:	AWS E6010 root pass; AWS E8010[1] on remaining passes		
SHEILDING FLUX:	AWS cellulosic on all passes		
PRODUCTION WELDING CONDITIONS			
DIRECTION OF WELDING:	Downhill	CURRENT/POLARITY:	Direct Current; reverse polarity, electrode positive.
WELDING TECHNIQUE:	Stringer	TEMP. MEASUREMENT:	Pyrometer or Tempil sticks.
PIPE POSITION:	Pipe axis to be in a fixed position.		
FITTING POSITION:	Position fitting and tack sufficiently to prevent shifting/warping during welding process.		
NUMBER OF WELDERS:	Minimum two welders required for sizes 14" thru 26" O.D.; Three or four welders required for sizes greater than 26" O.D.; Root and hot pass welders shall be equal in number; Only one welder is required for roll or fabrication welding.		
TIME LAPSE BETWEEN PASSES:	Maximum time between the completion of the root pass and the start of the second shall be 5 minutes. Each pass must be completed in its entirety before subsequent passes are initiated.		
TYPE/REMOVAL OF LINE-UP CLAMP:	Not applicable.		
	Use power and/or hand tools; remove all rust, dirt, and other foreign matter before starting weld; remove slag from		

	should be power buffed as much as practical and power ground as needed; clean finished weld.
PREHEAT AND POSTHEAT:	Preheat to 150°F Min to 350°F Max when the pipe has a temperature of 40°F or below, is wet, has a wall thickness over 0.500", a carbon equivalent over 0.40% or a yield strength greater than 52ksi. Temperature control shall be verified with approved devices. No PWHT required.

BRANCH AND SOCKET FILLET WELD JOINT DESIGN

Branch Type

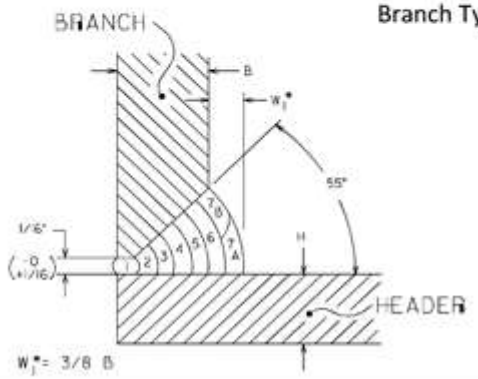

QUALIFIED JOINT DESIGN CONDITIONS

1. B or M to have MAOP ≥ Header.
2. Branch must be contoured to approx. curvature of Header.
3. Where M > H, the edges to be fillet welded shall be tapered to equal H while maintaining sufficient strength required by Condition 1.
4. Complete entire bead before starting next.
5. Minimum 1/4" overall dimension for weld widths W_1 and W_2.

Socket Type

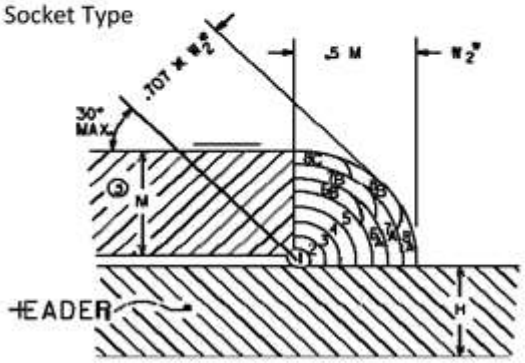

APPROVED FILLER METAL SELECTIONS

WALL THICK. (in)	ELECTRODE SIZE BY PASS			
	ROOT	HOT	FILLER(S)*	CAP(S)
MATERIAL	E6010	E8010	E8010	E8010
ALL	1/8", 5/32"	1/8", 5/32"	5/32", 3/16"	5/32", 3/16"

ASSOCIATED ELECTRICAL CHARACTERISTICS

FILLER MATERIAL		WELDING PARAMETERS		TRAVEL
SIZE	CLASSIFICATION	AMPERAGE	VOLTAGE	SPEED (IPM)
1/8"	E6010	90 - 170	28 - 51	3 - 13
1/8"	E8010	80 - 120	20 - 31	3 - 13
5/32"	E6010	90 - 170	20 - 35	3 - 13
5/32"	E8010	125 - 185	20 - 35	3 - 13
3/16"	E8010	110 - 210	22 - 35	3 - 13

*Stripper/Fill as required using the parameters of filler pass selection and associated characteristics

‡ The filler metal shall conform to AWS filler metal group 2 and A5.5 specification utilizing an E8010-G or E8010-P1 electrode.

The procedure qualification was conducted in accordance with the requirements of the latest approved edition of API Standard 1104, CFR Title 49 Part 192 and Dominion Energy North Carolina and Dominion Energy South Carolina Engineering Specifications.

WPS SM-70 (click here for pdf version)

DESCRIPTION:	Fillet welding procedure meeting the following requirements.
WELDING PROCESS:	Manual Shielded Metal Arc (SMAW) using stick electrodes.

PIPE AND FILLER MATERIAL REQUIREMENTS

PIPE AND FITTING MATERIAL:	Steel pipe and fitting grades with yield strengths equal to 65,000 psi.
BRANCH DIAMETER AND WALL THICKNESS:	Less than 2-3/8(2.375)" O.D. and 3/16(0.1875)" thru 3/4(0.750)" W.T.
FILLER MATERIAL:	AWS E6010 root pass; E8010[1] on remaining passes (exception if using 3/32" E6010 on all passes)
SHEILDING FLUX:	AWS cellulosic on all passes

PRODUCTION WELDING CONDITIONS

DIRECTION OF WELDING:	Downhill	CURRENT/POLARITY:	Direct Current; reverse polarity, electrode positive.
WELDING TECHNIQUE:	Stringer	TEMP. MEASUREMENT:	Pyrometer or Tempil sticks.
PIPE POSITION:	Pipe axis to be in a fixed position.		
FITTING POSITION:	Position fitting and tack sufficiently to prevent shifting/warping during welding process.		
NUMBER OF WELDERS:	One welder maximum.		
TIME LAPSE BETWEEN PASSES:	Maximum time between the completion of the root pass and the start of the second shall be 5 minutes. Each pass must be completed in its entirety before subsequent passes are initiated.		
TYPE/REMOVAL OF LINE-UP CLAMP:	Not applicable.		
CLEANING METHOD:	Use power and/or hand tools; remove all rust, dirt, and other foreign matter before starting weld; remove slag from bead surface before starting next bead; Root bead should be power ground as much as practical; All other passes should be power buffed as much as practical and power ground as needed; clean finished weld.		
PREHEAT AND POSTHEAT:	Preheat to 150°F Min to 350°F Max when the pipe has a temperature of 40°F or below, is wet, has a wall thickness over 0.500", a carbon equivalent over 0.40% or a yield strength greater than 52ksi. Temperature control shall be verified with approved devices. No PWHT required.		

BRANCH AND SOCKET FILLET WELD JOINT DESIGN

Branch Type

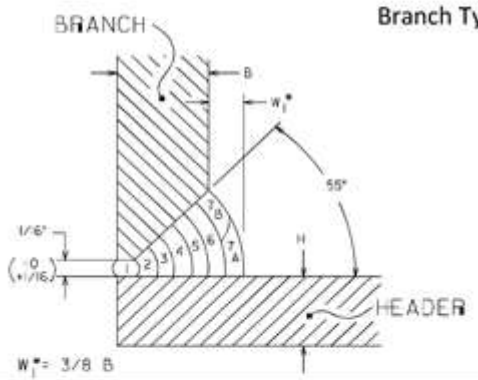

QUALIFIED JOINT DESIGN CONDITIONS

1. B or M to have MAOP ≥ Header.
2. Branch must be contoured to approx. curvature of Header.
3. Where M > H, the edges to be fillet welded shall be tapered to equal H while maintaining sufficient strength required by Condition 1.
4. Complete entire bead before starting next.
5. Minimum 1/4" overall dimension for weld widths W_1 and W_2.

Socket Type

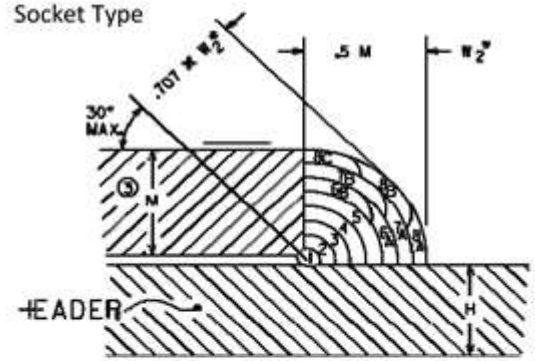

APPROVED FILLER METAL SELECTIONS

WALL THICK. (in)	ELECTRODE SIZE BY PASS			
	ROOT	HOT	FILLER(S)*	CAP(S)
MATERIAL	E6010	E6010	E6010	E6010

ASSOCIATED ELECTRICAL CHARACTERISTICS

FILLER MATERIAL		WELDING PARAMETERS		TRAVEL
SIZE	CLASSIFICATION	AMPERAGE	VOLTAGE	SPEED (IPM)
3/32"	E6010	45 - 95	20 - 34	3 - 13

ALL	5/32	5/32	5/32	5/32	1/8	E6010	65 - 115	18 - 29	3 - 13
MATERIAL	E6010	E8010	E8010	E8010	1/8"	E8010	65 - 120	19 - 30	3 - 13
ALL	1/8"	1/8"	1/8"	1/8"					

*Stripper/Fill as required using the parameters of filler pass selection and associated characteristics

[1] The filler metal shall conform to AWS filler metal group 2 and A5.5 specification utilizing an E8010-G or E8010-P1 electrode.

The procedure qualification was conducted in accordance with the requirements of the latest approved edition of API Standard 1104, CFR Title 49 Part 192 and Dominion Energy North Carolina and Dominion Energy South Carolina Engineering Specifications.

WPS SM-72 (click here for pdf version)

WPS No: SM-72

DATE: 5/1/2019

DESCRIPTION:	Fillet welding procedure meeting the following requirements.		
WELDING PROCESS:	Manual Shielded Metal Arc (SMAW) using stick electrodes.		
PIPE AND FILLER MATERIAL REQUIREMENTS			
PIPE AND FITTING MATERIAL:	Steel pipe and fitting grades with yield strengths equal to 65,000 psi.		
BRANCH DIAMETER AND WALL THICKNESS:	2-3/8(2.375)" thru 12-3/4(12.750)" O.D. and 3/16(0.1875)" thru 3/4(0.750)" W.T.		
FILLER MATERIAL:	AWS E6010 root pass; AWS E8010[1] on remaining passes		
SHEILDING FLUX:	AWS cellulosic on all passes		
PRODUCTION WELDING CONDITIONS			
DIRECTION OF WELDING:	Downhill	CURRENT/POLARITY:	Direct Current; reverse polarity, electrode positive.
WELDING TECHNIQUE:	Stringer	TEMP. MEASUREMENT:	Pyrometer or Tempil sticks.
PIPE POSITION:	Pipe axis to be in a fixed position.		
FITTING POSITION:	Position fitting and tack sufficiently to prevent shifting/warping during welding process.		
NUMBER OF WELDERS:	One or two welders as needed; Root and hot pass welders shall be equal in number; Only one welder is required for roll or fabrication welding.		
TIME LAPSE BETWEEN PASSES:	Maximum time between the completion of the root pass and the start of the second shall be 5 minutes. Each pass must be completed in its entirety before subsequent passes are initiated.		
TYPE/REMOVAL OF LINE-UP CLAMP:	Not applicable.		
CLEANING METHOD:	Use power and/or hand tools; remove all rust, dirt, and other foreign matter before starting weld; remove slag from bead surface before starting next bead; Root bead should be power ground as much as practical; All other passes should be power buffed as much as practical and power ground as needed; clean finished weld.		
	Preheat to 150°F Min to 350°F Max when the pipe has a temperature of 40°F or below, is wet, has a wall thickness		

verified with approved devices. No PWHT required.

BRANCH AND SOCKET FILLET WELD JOINT DESIGN

Branch Type

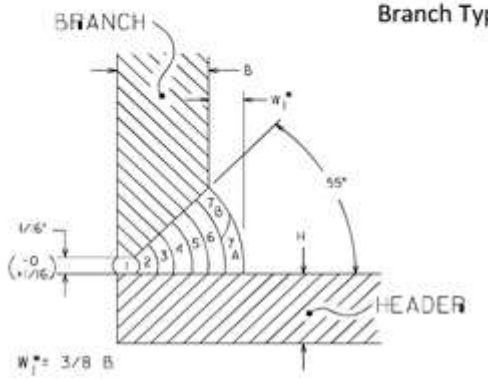

QUALIFIED JOINT DESIGN CONDITIONS

1. B or M to have MAOP ≥ Header.
2. Branch must be contoured to approx. curvature of Header.
3. Where M > H, the edges to be fillet welded shall be tapered to equal H while maintaining sufficient strength required by Condition 1.
4. Complete entire bead before starting next.
5. Minimum 1/4" overall dimension for weld widths W_1 and W_2.

Socket Type

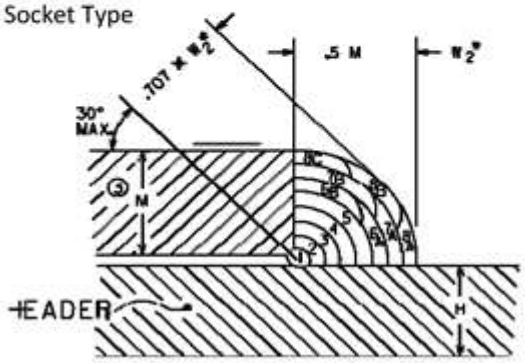

APPROVED FILLER METAL SELECTIONS				
WALL THICK. (in)	ELECTRODE SIZE BY PASS			
	ROOT	HOT	FILLER(S)*	CAP(S)
MATERIAL	E6010	E8010	E8010	E8010
ALL	1/8"	1/8"	1/8", 5/32"	1/8", 5/32"

ASSOCIATED ELECTRICAL CHARACTERISTICS				
FILLER MATERIAL		WELDING PARAMETERS		TRAVEL
SIZE	CLASSIFICATION	AMPERAGE	VOLTAGE	SPEED (IPM)
1/8"	E6010	65 - 115	21 - 34	3 - 13
1/8"	E8010	70 - 130	19 -31	3 - 13
5/32"	E8010	95 - 165	21 - 31	3 - 13

*Stripper/Fill as required using the parameters of filler pass selection and associated characteristics

[1] The filler metal shall conform to AWS filler metal group 2 and A5.5 specification utilizing an E8010-G or E8010-P1 electrode.

The procedure qualification was conducted in accordance with the requirements of the latest approved edition of API Standard 1104, CFR Title 49 Part 192 and Dominion Energy North Carolina and Dominion Energy South Carolina Engineering Specifications.

WPS SM-74 (click here for pdf version)

WPS No: SM-74

DATE: 5/1/2019

DESCRIPTION:	Fillet welding procedure meeting the following requirements.
WELDING PROCESS:	Manual Shielded Metal Arc (SMAW) using stick electrodes.

PIPE AND FITTING MATERIAL:	Steel pipe and fitting grades with yield strengths equal to 65,000 psi.
BRANCH DIAMETER AND WALL THICKNESS:	Over 12-3/4(12.750)" O.D. and 3/16(0.1875)" thru 3/4(0.750)" W.T.
FILLER MATERIAL:	AWS E6010 root pass; AWS E8010[1] on remaining passes
SHEILDING FLUX:	AWS cellulosic on all passes

PRODUCTION WELDING CONDITIONS

DIRECTION OF WELDING:	Downhill	CURRENT/POLARITY:	Direct Current; reverse polarity, electrode positive.
WELDING TECHNIQUE:	Stringer	TEMP. MEASUREMENT:	Pyrometer or Tempil sticks.
PIPE POSITION:	Pipe axis to be in a fixed position.		
FITTING POSITION:	Position fitting and tack sufficiently to prevent shifting/warping during welding process.		
NUMBER OF WELDERS:	Minimum two welders required for sizes 14" thru 26" O.D.; Three or four welders required for sizes greater than 26" O.D.; Root and hot pass welders shall be equal in number; Only one welder is required for roll or fabrication welding.		
TIME LAPSE BETWEEN PASSES:	Maximum time between the completion of the root pass and the start of the second shall be 5 minutes. Each pass must be completed in its entirety before subsequent passes are initiated.		
TYPE/REMOVAL OF LINE-UP CLAMP:	Not applicable.		
CLEANING METHOD:	Use power and/or hand tools; remove all rust, dirt, and other foreign matter before starting weld; remove slag from bead surface before starting next bead; Root bead should be power ground as much as practical; All other passes should be power buffed as much as practical and power ground as needed; clean finished weld.		
PREHEAT AND POSTHEAT:	Preheat to 150°F Min to 350°F Max when the pipe has a temperature of 40°F or below, is wet, has a wall thickness over 0.500", a carbon equivalent over 0.40% or a yield strength greater than 52ksi. Temperature control shall be verified with approved devices. No PWHT required.		

BRANCH AND SOCKET FILLET WELD JOINT DESIGN

Branch Type

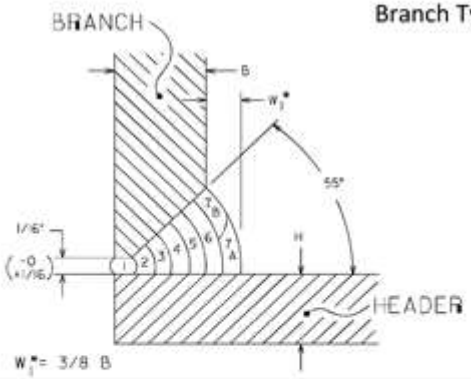

QUALIFIED JOINT DESIGN CONDITIONS

1. B or M to have MAOP ≥ Header.
2. Branch must be contoured to approx. curvature of Header.
3. Where M > H, the edges to be fillet welded shall be tapered to equal H while maintaining sufficient strength required by Condition 1.
4. Complete entire bead before starting next.
5. Minimum 1/4" overall dimension for weld widths W_1 and W_2.

Socket Type

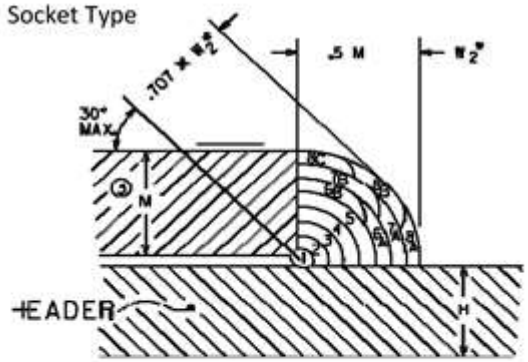

APPROVED FILLER METAL SELECTIONS

WALL THICK. (in)	ELECTRODE SIZE BY PASS			
	ROOT	HOT	FILLER(S)*	CAP(S)
MATERIAL	E6010	E8010	E8010	E8010
ALL	1/8", 5/32"	1/8", 5/32"	5/32", 3/16"	5/32", 3/16"

ASSOCIATED ELECTRICAL CHARACTERISTICS

FILLER MATERIAL		WELDING PARAMETERS		TRAVEL
SIZE	CLASSIFICATION	AMPERAGE	VOLTAGE	SPEED (IPM)
1/8"	E6010	90 - 170	28 - 51	3 - 13
1/8"	E8010	80 - 120	20 - 31	3 - 13
5/32"	E6010	80 - 200	20 - 40	3 - 13

					3/16"	E8010	110 - 205	21 - 36	3 - 13

*Stripper/Fill as required using the parameters of filler pass selection and associated characteristics

[1] The filler metal shall conform to AWS filler metal group 2 and A5.5 specification utilizing an E8010-G or E8010-P1 electrode.

The procedure qualification was conducted in accordance with the requirements of the latest approved edition of API Standard 1104, CFR Title 49 Part 192 and Dominion Energy North Carolina and Dominion Energy South Carolina Engineering Specifications.

WPS SM-78 (click here for pdf version)

WPS No: SM-78

DATE: 5/1/2019

DESCRIPTION:	Fillet welding procedure meeting the following requirements.		
WELDING PROCESS:	Manual Shielded Metal Arc (SMAW) using stick electrodes.		
PIPE AND FILLER MATERIAL REQUIREMENTS			
PIPE AND FITTING MATERIAL:	Steel pipe and fitting grades with yield strengths equal to 70,000 psi.		
BRANCH DIAMETER AND WALL THICKNESS:	2-3/8(2.375)" thru 12-3/4(12.750)" O.D. and 3/16(0.1875)" thru 3/4(0.750)" W.T.		
FILLER MATERIAL:	AWS E6010 root pass; AWS E9010[1] on remaining passes.		
SHEILDING FLUX:	AWS cellulosic on all passes		
PRODUCTION WELDING CONDITIONS			
DIRECTION OF WELDING:	Downhill	CURRENT/POLARITY:	Direct Current; reverse polarity, electrode positive.
WELDING TECHNIQUE:	Stringer	TEMP. MEASUREMENT:	Pyrometer or Tempil sticks.
PIPE POSITION:	Pipe axis to be in a fixed position.		
FITTING POSITION:	Position fitting and tack sufficiently to prevent shifting/warping during welding process.		
NUMBER OF WELDERS:	One or two welders as needed; Root and hot pass welders shall be equal in number; Only one welder is required for roll or fabrication welding.		
TIME LAPSE BETWEEN PASSES:	Maximum time between the completion of the root pass and the start of the second shall be 5 minutes. Each pass must be completed in its entirety before subsequent passes are initiated.		
TYPE/REMOVAL OF LINE-UP CLAMP:	Not applicable.		
CLEANING METHOD:	Use power and/or hand tools; remove all rust, dirt, and other foreign matter before starting weld; remove slag from bead surface before starting next bead; Root bead should be power ground as much as practical; All other passes should be power buffed as much as practical and power ground as needed; clean finished weld.		
PREHEAT AND POSTHEAT:	Preheat to 150°F Min to 350°F Max when the pipe has a temperature of 40°F or below, is wet, has a wall thickness over 0.500", a carbon equivalent over 0.40% or a yield strength greater than 52ksi. Temperature control shall be verified with approved devices. No PWHT required.		

Branch Type

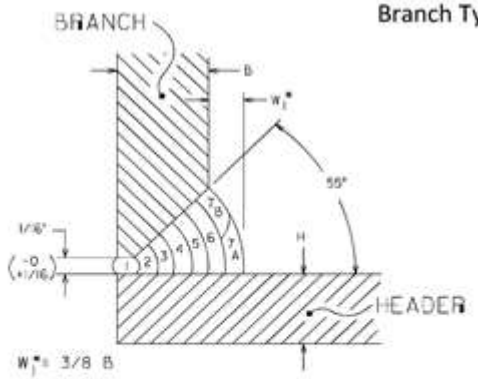

QUALIFIED JOINT DESIGN CONDITIONS

1. B or M to have MAOP ≥ Header.
2. Branch must be contoured to approx. curvature of Header.
3. Where M > H, the edges to be fillet welded shall be tapered to equal H while maintaining sufficient strength required by Condition 1.
4. Complete entire bead before starting next.
5. Minimum 1/4" overall dimension for weld widths W_1 and W_2.

Socket Type

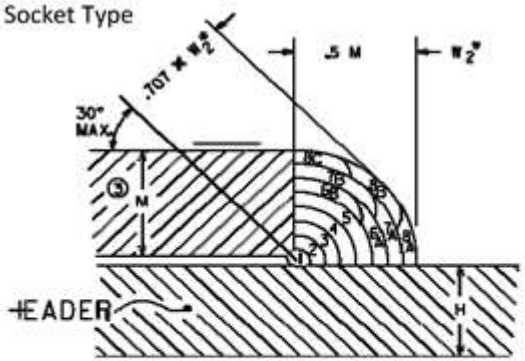

APPROVED FILLER METAL SELECTIONS				
WALL THICK. (in)	ELECTRODE SIZE BY PASS			
	ROOT	HOT	FILLER(S)*	CAP(S)
MATERIAL	E6010	E9010	E9010	E9010
ALL	1/8"	1/8"	1/8", 5/32"	1/8", 5/32"

ASSOCIATED ELECTRICAL CHARACTERISTICS				
FILLER MATERIAL		WELDING PARAMETERS		TRAVEL
SIZE	CLASSIFICATION	AMPERAGE	VOLTAGE	SPEED (IPM)
1/8"	E6010	65 - 120	21 - 36	3 - 13
1/8"	E9010	65 - 110	20 - 31	3 - 13
5/32"	E9010	80 - 125	22 - 31	3 - 13

*Stripper/Fill as required using the parameters of filler pass selection and associated characteristics

[1] The filler metal shall conform to AWS filler metal group 2 and A5.5 specification utilizing an E9010-G electrode.

The procedure qualification was conducted in accordance with the requirements of the latest approved edition of API Standard 1104, CFR Title 49 Part 192 and Dominion Energy North Carolina and Dominion Energy South Carolina Engineering Specifications.

WPS SM-101 (click here for pdf version)

WPS No: SM-101

DATE: 5/1/2019

DESCRIPTION:	In-service welding procedure meeting the following requirements.
WELDING PROCESS:	Manual Shielded Metal Arc (SMAW) using stick electrodes.
PIPE AND FILLER MATERIAL REQUIREMENTS	
PIPE AND FITTING MATERIAL:	Steel pipe and fitting grades with yield strengths less than or equal to 42,000 psi.

FILLER MATERIAL:	AWS E6010 root pass; AWS E7018 H4R on remaining passes.
SHEILDING FLUX:	AWS cellulosic on root pass and low hydrogen on all remaining passes.

PRODUCTION WELDING CONDITIONS

WELDING TECHNIQUE:	Stringer	CURRENT/POLARITY:	Direct Current; reverse polarity, electrode positive
PIPE POSITION:	Pipe axis to be in a fixed position.	TEMP. MEASUREMENT:	Pyrometer or Tempil sticks

FITTING POSITION:	Position fitting and tack sufficiently to prevent shifting and warping during the welding process.
DIRECTION OF WELDING:	Downhill on root pass and uphill on all remaining passes.
NUMBER OF WELDERS:	One welder maximum.
TIME LAPSE BETWEEN PASSES:	Maximum time between the completion of the root pass and the start of the second shall be 5 minutes. Each pass must be completed in its entirety before subsequent passes are initiated.
TYPE/REMOVAL OF LINE-UP CLAMP:	Use devices as necessary to hold fitting in place until properly tacked.
CLEANING METHOD:	Use power and/or hand tools; remove all rust, dirt, and other foreign matter before starting weld; remove slag from bead surface before starting next bead; Root bead should be power ground as much as practical; All other passes should be power buffed as much as practical and power ground as needed; clean finished weld.
PREHEAT AND POSTHEAT:	Preheat to 150°F Min to 350°F Max when the pipe has a temperature of 40°F or below, is wet, has a wall thickness over 0.500", a carbon equivalent over 0.40% or a yield strength greater than 52ksi. Temperature control shall be verified with approved devices. No PWHT required.

GROOVE WELD BUTT JOINT DESIGN

For joints paralleling the axis of the carrier pipe may be fitted with a suitable tape or mild steel backing strip to prevent the weld from being fused to the surface of the carrier pipe.

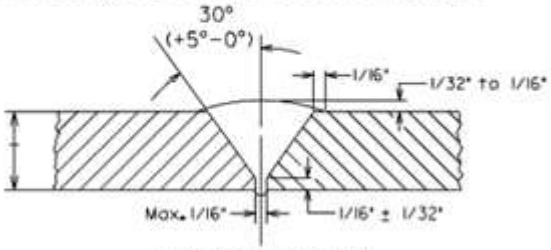

STANDARD "V" BEVEL BUTT JOINT

QUALIFIED JOINT DESIGN CONDITIONS

"V" groove composed of two 30 (+5 - 0) bevels with 1/16" spacing and 1/16" (+/- 1/32") land.

MINIMUM NO. OF PASSES

W.T. (in)	MIN. PASSES
≤ 0.250	3
> 0.250 ≤ 0.450	4
> 0.450 ≤ 0.650	5
> 0.650 ≤ 0.750	7

For sequencing of beads see reference drawings in section X of Welding Manual, Figures 2 thru 9 encompassing split, reinforcing and encirclement fittings.

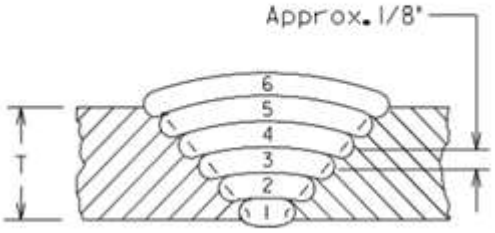

BRANCH AND SOCKET FILLET WELD JOINT DESIGN

Branch Type

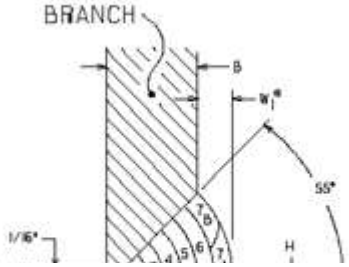

QUALIFIED JOINT DESIGN CONDITIONS

1. B or M to have MAOP ≥ Header.
2. Branch must be contoured to approx. curvature of Header.
3. Where M > H, the edges to be fillet welded shall be tapered to equal H while maintaining sufficient strength required by Condition 1.

Socket Type

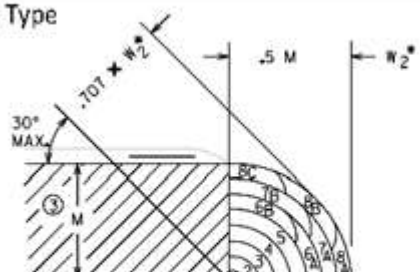

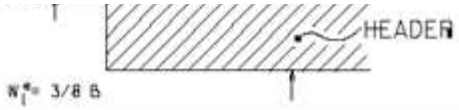

5. Minimum 1/4" overall dimension for weld widths W_1 and W_2.

Note1: For In-service welds on fittings of 2-1/2" O.D. or less, the SMAW downhill procedure specifications of SM-51 or SM-52 can be utilized in lieu of (ie. 2" split fitting)

APPROVED FILLER METAL SELECTIONS				
WALL THICK.	ELECTRODE SIZE BY PASS			
(in)	ROOT	HOT	FILLER(S)*	CAP(S)
MATERIAL	E6010	E7018 H4R	E7018 H4R	E7018 H4R
ALL	3/32", 1/8"	3/32"	3/32"	3/32"

ASSOCIATED ELECTRICAL CHARACTERISTICS				
FILLER MATERIAL		WELDING PARAMETERS		TRAVEL
SIZE	CLASSIFICATION	AMPERAGE	VOLTAGE	SPEED (IPM)
3/32"	E6010	40 - 85	20 - 32	2 - 16
3/32"	E7018 H4R	50 - 95	18 - 29	2 - 16
1/8"	E6010	60 - 100	22 - 35	2 - 16

*Stripper/Fill as required using the parameters of filler pass selection and associated characteristics

The procedure qualification was conducted in accordance with the requirements of the latest approved edition of API Standard 1104, CFR Title 49 Part 192 and Dominion Energy North Carolina and Dominion Energy South Carolina Engineering Specifications.

WPS SM-102 (click here for pdf version)

WPS No: SM-102

DATE: 5/1/2019

DESCRIPTION:	In-service welding procedure meeting the following requirements.
WELDING PROCESS:	Manual Shielded Metal Arc (SMAW) using stick electrodes.

PIPE AND FILLER MATERIAL REQUIREMENTS	
PIPE AND FITTING MATERIAL:	Steel pipe and fitting grades with yield strengths less than or equal to 42,000 psi.
NON-CARRIER DIAMETER AND WALL THICKNESS:	2-3/8(2.375)" thru 12-3/4(12.750)" O.D. and all wall thicknesses.
FILLER MATERIAL:	AWS E6010 root pass; AWS E7018 H4R on remaining passes.
SHEILDING FLUX:	AWS cellulosic on root pass and low hydrogen on all remaining passes.

PRODUCTION WELDING CONDITIONS			
WELDING TECHNIQUE:	Stringer	CURRENT/POLARITY:	Direct Current; reverse polarity, electrode positive
PIPE POSITION:	Pipe axis to be in a fixed position.	TEMP. MEASUREMENT:	Pyrometer or Tempil sticks
FITTING POSITION:	Position fitting and tack sufficiently to prevent shifting and warping during the welding process.		
DIRECTION OF WELDING:	Downhill on root pass and uphill on all remaining passes.		
NUMBER OF WELDERS:	One or two welders as needed; Root and hot pass welders shall be equal in number; Only one welder is required for roll or fabrication welding; Two welders simultaneously welding a circumferential weld must weld in opposite quadrants.		
TIME LAPSE BETWEEN PASSES:	Maximum time between the completion of the root pass and the start of the second shall be 5 minutes. Each pass must be completed in its entirety before subsequent passes are initiated.		
TYPE/REMOVAL OF LINE-UP CLAMP:	Use devices as necessary to hold fitting in place until properly tacked.		
	Use power and/or hand tools; remove all rust, dirt, and other foreign matter before starting weld; remove slag from		

	should be power buffed as much as practical and power ground as needed; clean finished weld.
PREHEAT AND POSTHEAT:	Preheat to 150°F Min to 350°F Max when the pipe has a temperature of 40°F or below, is wet, has a wall thickness over 0.500", a carbon equivalent over 0.40% or a yield strength greater than 52ksi. Temperature control shall be verified with approved devices. No PWHT required.

GROOVE WELD BUTT JOINT DESIGN

For joints paralleling the axis of the carrier pipe may be fitted with a suitable tape or mild steel backing strip to prevent the weld from being fused to the surface of the carrier pipe.

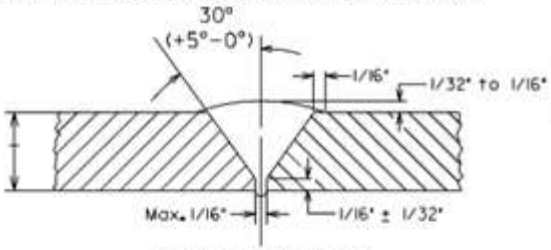

STANDARD "V" BEVEL BUTT JOINT

QUALIFIED JOINT DESIGN CONDITIONS

"V" groove composed of two 30 (+5 - 0) bevels with 1/16" spacing and 1/16" (+/- 1/32") land.

MINIMUM NO. OF PASSES

W.T. (in)	MIN. PASSES
≤ 0.250	3
> 0.250 ≤ 0.450	4
> 0.450 ≤ 0.650	5
> 0.650 ≤ 0.750	7

For sequencing of beads see reference drawings in section X of Welding Manual, Figures 2 thru 9 encompassing split, reinforcing and encirclement fittings.

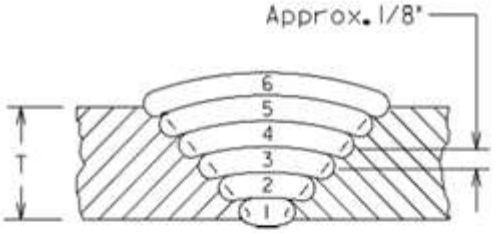

BRANCH AND SOCKET FILLET WELD JOINT DESIGN

Branch Type

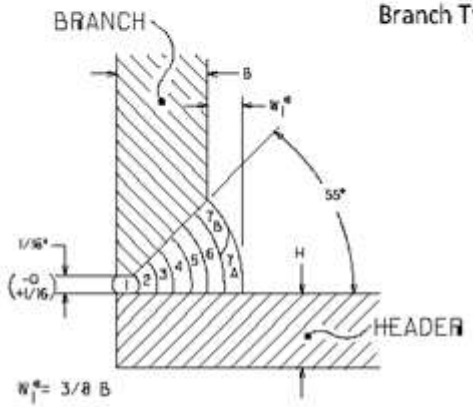

QUALIFIED JOINT DESIGN CONDITIONS

1. B or M to have MAOP ≥ Header.
2. Branch must be contoured to approx. curvature of Header.
3. Where M > H, the edges to be fillet welded shall be tapered to equal H while maintaining sufficient strength required by Condition 1.
4. Complete entire bead before starting next.
5. Minimum 1/4" overall dimension for weld widths W_1 and W_2.

Socket Type

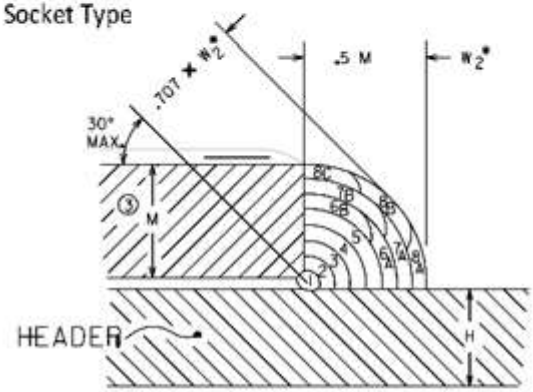

Note1: For In-service welds on fittings of 2-1/2" O.D. or less, the SMAW downhill procedure specifications of SM-51 or SM-52 can be utilized in lieu of (ie. 2" split fitting)

APPROVED FILLER METAL SELECTIONS

WALL THICK. (in)	ELECTRODE SIZE BY PASS			
	ROOT	HOT	FILLER(S)*	CAP(S)
MATERIAL	E6010	E7018 H4R	E7018 H4R	E7018 H4R
ALL	3/32", 1/8"	3/32"	3/32", 1/8"	3/32", 1/8"

ASSOCIATED ELECTRICAL CHARACTERISTICS

FILLER MATERIAL		WELDING PARAMETERS		TRAVEL
SIZE	CLASSIFICATION	AMPERAGE	VOLTAGE	SPEED (IPM)
3/32"	E6010	40 - 85	20 - 32	2 - 16
3/32"	E7018 H4R	55 - 115	19 - 32	2 - 16
1/8"	E6010	60 - 115	23 - 36	2 - 16
1/8"	E7018 H4R	100 - 145	18 - 30	2 - 16

*Stripper/Fill as required using the parameters of filler pass selection and associated characteristics

and Dominion Energy North Carolina and Dominion Energy South Carolina Engineering Specifications.

WPS SM-108 (click here for pdf version)

WPS No: SM-108

DATE: 5/1/2019

DESCRIPTION:	In-service welding procedure meeting the following requirements.
WELDING PROCESS:	Manual Shielded Metal Arc (SMAW) using stick electrodes.

PIPE AND FILLER MATERIAL REQUIREMENTS

PIPE AND FITTING MATERIAL:	Steel pipe and fitting grades with yield strengths greater than 42,000psi but less than or equal to 52,000 psi.
NON-CARRIER DIAMETER AND WALL THICKNESS:	2-3/8(2.375)" thru 12-3/4(12.750)" O.D. and all wall thicknesses.
FILLER MATERIAL:	AWS E6010 root pass; AWS E7018 H4R on remaining passes.
SHEILDING FLUX:	AWS cellulosic on root pass and low hydrogen on all remaining passes.

PRODUCTION WELDING CONDITIONS

WELDING TECHNIQUE:	Stringer	CURRENT/POLARITY:	Direct Current; reverse polarity, electrode positive
PIPE POSITION:	Pipe axis to be in a fixed position.	TEMP. MEASUREMENT:	Pyrometer or Tempil sticks

FITTING POSITION:	Position fitting and tack sufficiently to prevent shifting and warping during the welding process.
DIRECTION OF WELDING:	Downhill on root pass and uphill on all remaining passes.
NUMBER OF WELDERS:	One or two welders as needed; Root and hot pass welders shall be equal in number; Only one welder is required for roll or fabrication welding; Two welders simultaneously welding a circumferential weld must weld in opposite quadrants.
TIME LAPSE BETWEEN PASSES:	Maximum time between the completion of the root pass and the start of the second shall be 5 minutes. Each pass must be completed in its entirety before subsequent passes are initiated.
TYPE/REMOVAL OF LINE-UP CLAMP:	Use devices as necessary to hold fitting in place until properly tacked.
CLEANING METHOD:	Use power and/or hand tools; remove all rust, dirt, and other foreign matter before starting weld; remove slag from bead surface before starting next bead; Root bead should be power ground as much as practical; All other passes should be power buffed as much as practical and power ground as needed; clean finished weld.
PREHEAT AND POSTHEAT:	Preheat to 150°F Min to 350°F Max when the pipe has a temperature of 40°F or below, is wet, has a wall thickness over 0.500", a carbon equivalent over 0.40% or a yield strength greater than 52ksi. Temperature control shall be verified with approved devices. No PWHT required.

GROOVE WELD BUTT JOINT DESIGN

For joints paralleling the axis of the carrier pipe may be fitted with a suitable tape or mild steel backing strip to prevent the weld from being fused to the surface of the carrier pipe.

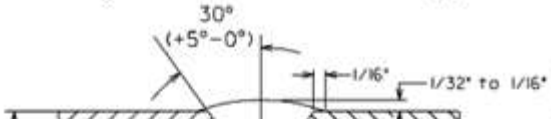

QUALIFIED JOINT DESIGN CONDITIONS
"V" groove composed of two 30 (+5 - 0) bevels with 1/16" spacing and 1/16" (+/- 1/32") land.
MINIMUM NO. OF PASSES

For sequencing of beads see reference drawings in section X of Welding Manual, Figures 2 thru 9 encompassing split, reinforcing and encirclement fittings.

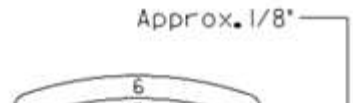

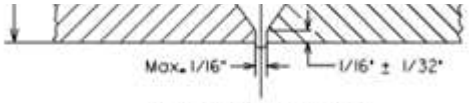

STANDARD "V" BEVEL BUTT JOINT

≤ 0.250	3
> 0.250 ≤ 0.450	4
> 0.450 ≤ 0.650	5
> 0.650 ≤ 0.750	7

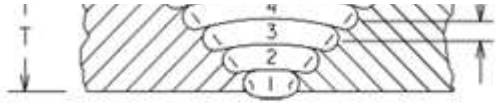

BRANCH AND SOCKET FILLET WELD JOINT DESIGN

Branch Type

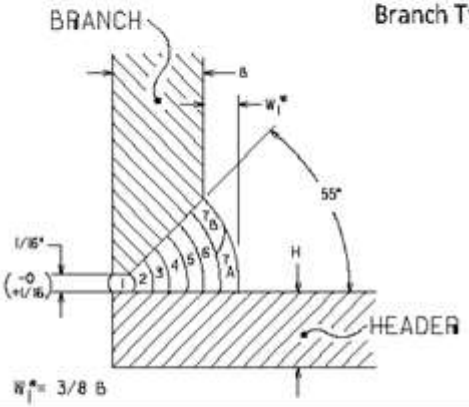

QUALIFIED JOINT DESIGN CONDITIONS

1. B or M to have MAOP ≥ Header.
2. Branch must be contoured to approx. curvature of Header.
3. Where M > H, the edges to be fillet welded shall be tapered to equal H while maintaining sufficient strength required by Condition 1.
4. Complete entire bead before starting next.
5. Minimum 1/4" overall dimension for weld widths W_1 and W_2.

Socket Type

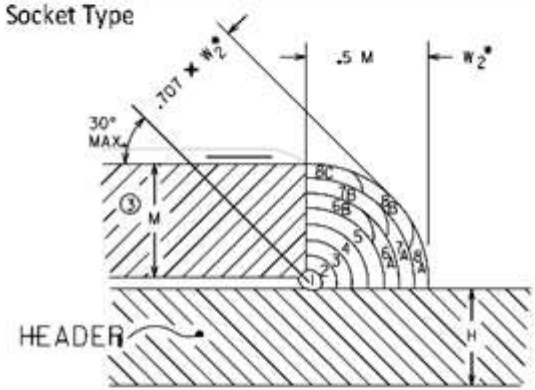

APPROVED FILLER METAL SELECTIONS

WALL THICK. (in)	ELECTRODE SIZE BY PASS			
	ROOT	HOT	FILLER(S)*	CAP(S)
MATERIAL	E6010	E7018 H4R	E7018 H4R	E7018 H4R
ALL	3/32", 1/8"	3/32"	3/32", 1/8"	3/32", 1/8"

ASSOCIATED ELECTRICAL CHARACTERISTICS

FILLER MATERIAL		WELDING PARAMETERS		TRAVEL
SIZE	CLASSIFICATION	AMPERAGE	VOLTAGE	SPEED (IPM)
3/32"	E6010	45 - 90	20 - 35	2 - 16
3/32"	E7018 H4R	75 - 120	18 - 34	2 - 16
1/8"	E6010	80 - 130	21 - 34	2 - 16
1/8"	E7018 H4R	100 - 145	18 - 30	2 - 16

*Stripper/Fill as required using the parameters of filler pass selection and associated characteristics

The procedure qualification was conducted in accordance with the requirements of the latest approved edition of API Standard 1104, CFR Title 49 Part 192 and Dominion Energy North Carolina and Dominion Energy South Carolina Engineering Specifications.

WPS SM-109 (click here for pdf version)

WPS No: SM-109

DATE: 5/1/2019

DESCRIPTION:	In-service welding procedure meeting the following requirements.
WELDING PROCESS:	Manual Shielded Metal Arc (SMAW) using stick electrodes.

PIPE AND FILLER MATERIAL REQUIREMENTS

PIPE AND FITTING MATERIAL:	Steel pipe and fitting grades with yield strengths greater than 42,000psi but less than or equal to 52,000 psi.
NON-CARRIER DIAMETER AND WALL THICKNESS:	Over 12-3/4(12.750)" O.D. and all wall thicknesses.
FILLER MATERIAL:	AWS E6010 root pass; AWS E7018 H4R on remaining passes

SHEILDING FLUX: AWS cellulosic on root pass and low hydrogen on all remaining passes.

PRODUCTION WELDING CONDITIONS

WELDING TECHNIQUE:	Stringer	CURRENT/POLARITY:	Direct Current; reverse polarity, electrode positive
PIPE POSITION:	Pipe axis to be in a fixed position.	TEMP. MEASUREMENT:	Pyrometer or Tempil sticks
FITTING POSITION:	Position fitting and tack sufficiently to prevent shifting and warping during the welding process.		
DIRECTION OF WELDING:	Downhill on root pass and uphill on all remaining passes.		
NUMBER OF WELDERS:	Minimum two welders required for sizes 14" thru 26" O.D.; Three or four welders required for sizes greater than 26" O.D.; Root and hot pass welders shall be equal in number; Only one welder is required for roll or fabrication welding; Two welders simultaneously welding a circumferential weld must weld in opposite quadrants.		
TIME LAPSE BETWEEN PASSES:	Maximum time between the completion of the root pass and the start of the second shall be 5 minutes. Each pass must be completed in its entirety before subsequent passes are initiated.		
TYPE/REMOVAL OF LINE-UP CLAMP:	Use devices as necessary to hold fitting in place until properly tacked.		
CLEANING METHOD:	Use power and/or hand tools; remove all rust, dirt, and other foreign matter before starting weld; remove slag from bead surface before starting next bead; Root bead should be power ground as much as practical; All other passes should be power buffed as much as practical and power ground as needed; clean finished weld.		
PREHEAT AND POSTHEAT:	Preheat to 150°F Min to 350°F Max when the pipe has a temperature of 40°F or below, is wet, has a wall thickness over 0.500", a carbon equivalent over 0.40% or a yield strength greater than 52ksi. Temperature control shall be verified with approved devices. No PWHT required.		

GROOVE WELD BUTT JOINT DESIGN

For joints paralleling the axis of the carrier pipe may be fitted with a suitable tape or mild steel backing strip to prevent the weld from being fused to the surface of the carrier pipe.

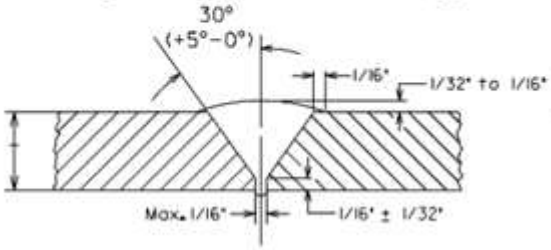

STANDARD "V" BEVEL BUTT JOINT

QUALIFIED JOINT DESIGN CONDITIONS

"V" groove composed of two 30 (+5 - 0) bevels with 1/16" spacing and 1/16" (+/- 1/32") land.

MINIMUM NO. OF PASSES

W.T. (in)	MIN. PASSES
≤ 0.250	3
> 0.250 ≤ 0.450	4
> 0.450 ≤ 0.650	5
> 0.650 ≤ 0.750	7

For sequencing of beads see reference drawings in section X of Welding Manual, Figures 2 thru 9 encompassing split, reinforcing and encirclement fittings.

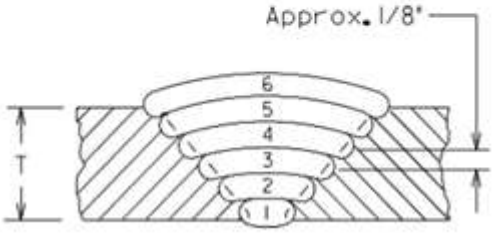

BRANCH AND SOCKET FILLET WELD JOINT DESIGN

Branch Type

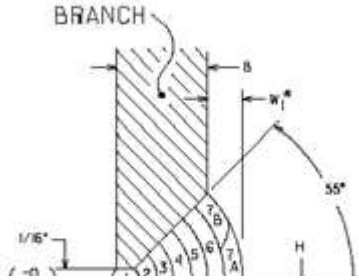

QUALIFIED JOINT DESIGN CONDITIONS

1. B or M to have MAOP ≥ Header.
2. Branch must be contoured to approx. curvature of Header.
3. Where M > H, the edges to be fillet welded shall be tapered to equal H while maintaining sufficient strength required by Condition 1.

Socket Type

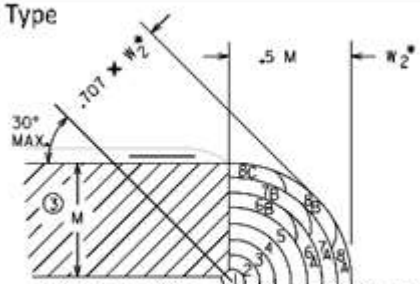

5. Minimum 1/4" overall dimension for weld widths W_1 and W_2.

APPROVED FILLER METAL SELECTIONS				
WALL THICK. (in)	ELECTRODE SIZE BY PASS			
	ROOT	HOT	FILLER(S)*	CAP(S)
MATERIAL	E6010	E7018 H4R	E7018 H4R	E7018 H4R
ALL	3/32", 1/8"	3/32"	3/32", 1/8"	3/32", 1/8"

ASSOCIATED ELECTRICAL CHARACTERISTICS				
FILLER MATERIAL		WELDING PARAMETERS		TRAVEL
SIZE	CLASSIFICATION	AMPERAGE	VOLTAGE	SPEED (IPM)
3/32"	E6010	45 - 90	20 - 35	2 - 16
3/32"	E7018 H4R	75 - 130	19 - 34	2 - 16
1/8"	E6010	85 - 135	22 - 37	2 - 16
1/8"	E7018 H4R	105 - 160	19 - 30	2 - 16

*Stripper/Fill as required using the parameters of filler pass selection and associated characteristics

The procedure qualification was conducted in accordance with the requirements of the latest approved edition of API Standard 1104, CFR Title 49 Part 192 and Dominion Energy North Carolina and Dominion Energy South Carolina Engineering Specifications.

WPS SM-114 (click here for pdf version)

WPS No: SM-114

DATE: 5/1/2019

DESCRIPTION:	In-service welding procedure meeting the following requirements.
WELDING PROCESS:	Manual Shielded Metal Arc (SMAW) using stick electrodes.
PIPE AND FILLER MATERIAL REQUIREMENTS	
PIPE AND FITTING MATERIAL:	Steel pipe and fitting grades with yield strengths greater than 52,000psi but less than or equal to 60,000 psi.
NON-CARRIER DIAMETER AND WALL THICKNESS:	2-3/8(2.375)" thru 12-3/4(12.750)" O.D. and all wall thicknesses.
FILLER MATERIAL:	AWS E6010 root pass; AWS E8018-B2 H4R on remaining passes.
SHEILDING FLUX:	AWS cellulosic on root pass and low hydrogen on all remaining passes.

PRODUCTION WELDING CONDITIONS			
WELDING TECHNIQUE:	Stringer	CURRENT/POLARITY:	Direct Current; reverse polarity, electrode positive
PIPE POSITION:	Pipe axis to be in a fixed position.	TEMP. MEASUREMENT:	Pyrometer or Tempil sticks
FITTING POSITION:	Position fitting and tack sufficiently to prevent shifting and warping during the welding process.		
DIRECTION OF WELDING:	Downhill on root pass and uphill on all remaining passes.		
NUMBER OF WELDERS:	One or two welders as needed; Root and hot pass welders shall be equal in number; Only one welder is required for roll or fabrication welding; Two welders simultaneously welding a circumferential weld must weld in opposite quadrants.		
TIME LAPSE BETWEEN PASSES:	Maximum time between the completion of the root pass and the start of the second shall be 5 minutes. Each pass must be completed in its entirety before subsequent passes are initiated.		
TYPE/REMOVAL OF LINE-UP CLAMP:	Use devices as necessary to hold fitting in place until properly tacked.		
CLEANING METHOD:	Use power and/or hand tools; remove all rust, dirt, and other foreign matter before starting weld; remove slag from bead surface before starting next bead; Root bead should be power ground as much as practical; All other passes should be power buffed as much as practical and power ground as needed; clean finished weld		

PREHEAT AND POSTHEAT:	Preheat to 150 F Min to 350 F Max when the pipe has a temperature of 40 F or below, is wet, has a wall thickness over 0.500", a carbon equivalent over 0.40% or a yield strength greater than 52ksi. Temperature control shall be verified with approved devices. No PWHT required.

GROOVE WELD BUTT JOINT DESIGN

For joints paralleling the axis of the carrier pipe may be fitted with a suitable tape or mild steel backing strip to prevent the weld from being fused to the surface of the carrier pipe.

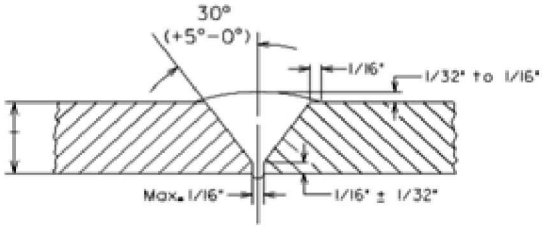

STANDARD "V" BEVEL BUTT JOINT

QUALIFIED JOINT DESIGN CONDITIONS

"V" groove composed of two 30 (+5 - 0) bevels with 1/16" spacing and 1/16" (+/- 1/32") land.

MINIMUM NO. OF PASSES

W.T. (in)	MIN. PASSES
≤ 0.250	3
> 0.250 ≤ 0.450	4
> 0.450 ≤ 0.650	5
> 0.650 ≤ 0.750	7

For sequencing of beads see reference drawings in section X of Welding Manual, Figures 2 thru 9 encompassing split, reinforcing and encirclement fittings.

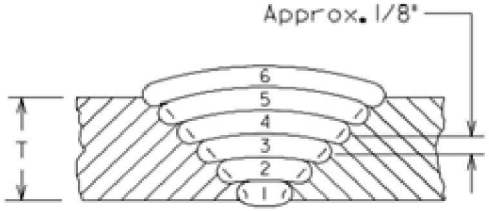

BRANCH AND SOCKET FILLET WELD JOINT DESIGN

Branch Type

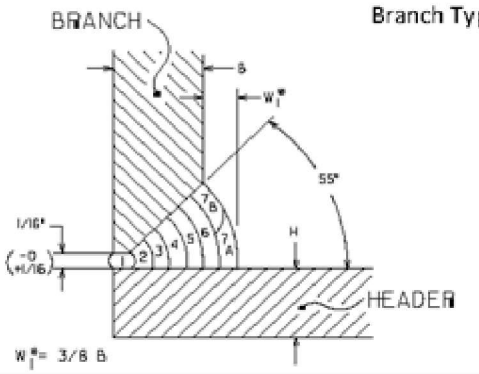

QUALIFIED JOINT DESIGN CONDITIONS

1. B or M to have MAOP ≥ Header.
2. Branch must be contoured to approx. curvature of Header.
3. Where M > H, the edges to be fillet welded shall be tapered to equal H while maintaining sufficient strength required by Condition 1.
4. Complete entire bead before starting next.
5. Minimum 1/4" overall dimension for weld widths W_1 and W_2.

Socket Type

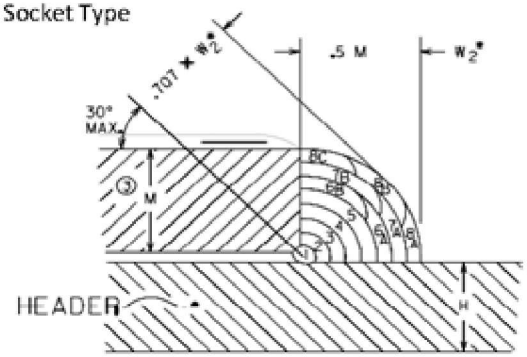

APPROVED FILLER METAL SELECTIONS

WALL THICK. (in)	ELECTRODE SIZE BY PASS			
	ROOT	HOT	FILLER(S)*	CAP(S)
MATERIAL	E6010	E8018-B2 H4R	E8018-B2 H4R	E8018-B2 H4R
ALL	3/32", 1/8"	3/32"	3/32", 1/8"	3/32", 1/8"

ASSOCIATED ELECTRICAL CHARACTERISTICS

FILLER MATERIAL		WELDING PARAMETERS		TRAVEL
SIZE	CLASSIFICATION	AMPERAGE	VOLTAGE	SPEED (IPM)
3/32"	E6010	48 - 90	20 - 35	2 - 16
3/32"	E8018-B2 H4R	70 - 120	20 -34	2 - 16
1/8"	E6010	85 - 130	22 - 38	2 - 16
1/8"	E8018-B2 H4R	95 - 160	19 - 32	2 - 16

*Stripper/Fill as required using the parameters of filler pass selection and associated characteristics

The procedure qualification was conducted in accordance with the requirements of the latest approved edition of API Standard 1104, CFR Title 49 Part 192 and Dominion Energy North Carolina and Dominion Energy South Carolina Engineering Specifications.

WPS SM-115 (click here for pdf version)

WPS NO. SM-113 DATE: 5/1/2013

DESCRIPTION:	In-service welding procedure meeting the following requirements.
WELDING PROCESS:	Manual Shielded Metal Arc (SMAW) using stick electrodes.

PIPE AND FILLER MATERIAL REQUIREMENTS

PIPE AND FITTING MATERIAL:	Steel pipe and fitting grades with yield strengths greater than 52,000psi but less than or equal to 60,000 psi.
NON-CARRIER DIAMETER AND WALL THICKNESS:	Over 12-3/4(12.750)" O.D. and all wall thicknesses.
FILLER MATERIAL:	AWS E6010 root pass; AWS E8018-B2 H4R on remaining passes.
SHEILDING FLUX:	AWS cellulosic on root pass and low hydrogen on all remaining passes.

PRODUCTION WELDING CONDITIONS

WELDING TECHNIQUE:	Stringer	CURRENT/POLARITY:	Direct Current; reverse polarity, electrode positive
PIPE POSITION:	Pipe axis to be in a fixed position.	TEMP. MEASUREMENT:	Pyrometer or Tempil sticks

FITTING POSITION:	Position fitting and tack sufficiently to prevent shifting and warping during the welding process.
DIRECTION OF WELDING:	Downhill on root pass and uphill on all remaining passes.
NUMBER OF WELDERS:	Minimum two welders required for sizes 14" thru 26" O.D.; Three or four welders required for sizes greater than 26" O.D.; Root and hot pass welders shall be equal in number; Only one welder is required for roll or fabrication welding; Two welders simultaneously welding a circumferential weld must weld in opposite quadrants.
TIME LAPSE BETWEEN PASSES:	Maximum time between the completion of the root pass and the start of the second shall be 5 minutes. Each pass must be completed in its entirety before subsequent passes are initiated.
TYPE/REMOVAL OF LINE-UP CLAMP:	Use devices as necessary to hold fitting in place until properly tacked.
CLEANING METHOD:	Use power and/or hand tools; remove all rust, dirt, and other foreign matter before starting weld; remove slag from bead surface before starting next bead; Root bead should be power ground as much as practical; All other passes should be power buffed as much as practical and power ground as needed; clean finished weld.
PREHEAT AND POSTHEAT:	Preheat to 150°F Min to 350°F Max when the pipe has a temperature of 40°F or below, is wet, has a wall thickness over 0.500", a carbon equivalent over 0.40% or a yield strength greater than 52ksi. Temperature control shall be verified with approved devices. No PWHT required.

GROOVE WELD BUTT JOINT DESIGN

For joints paralleling the axis of the carrier pipe may be fitted with a suitable tape or mild steel backing strip to prevent the weld from being fused to the surface of the carrier pipe.

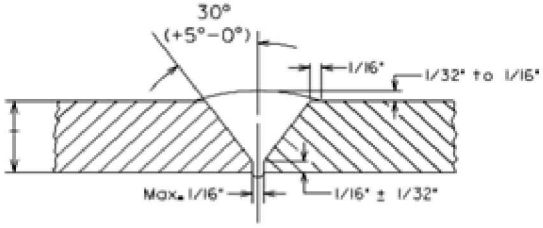

STANDARD "V" BEVEL BUTT JOINT

QUALIFIED JOINT DESIGN CONDITIONS

"V" groove composed of two 30 (+5 - 0) bevels with 1/16" spacing and 1/16" (+/- 1/32") land.

MINIMUM NO. OF PASSES

W.T. (in)	MIN. PASSES
≤ 0.250	3
> 0.250 ≤ 0.450	4
> 0.450 ≤ 0.650	5
> 0.650 ≤ 0.750	7

For sequencing of beads see reference drawings in section X of Welding Manual, Figures 2 thru 9 encompassing split, reinforcing and encirclement fittings.

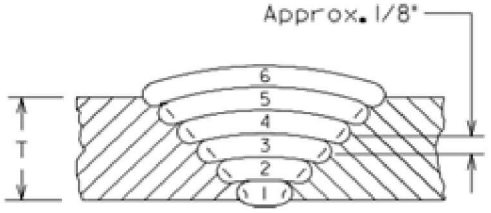

BRANCH AND SOCKET FILLET WELD JOINT DESIGN

Branch Type

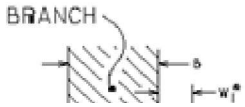

QUALIFIED JOINT DESIGN CONDITIONS

1. B or M to have MAOP ≥ Header.
2. Branch must be contoured to approx. curvature of Header.

Socket Type

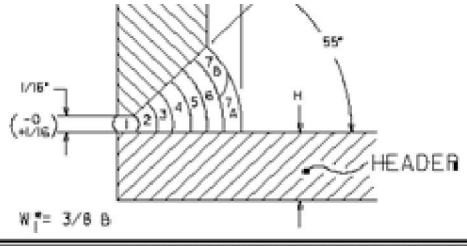

3. Where W > H, the edges to be fillet welded shall be tapered to equal H while maintaining sufficient strength required by Condition 1.

4. Complete entire bead before starting next.

5. Minimum 1/4" overall dimension for weld widths W_1 and W_2.

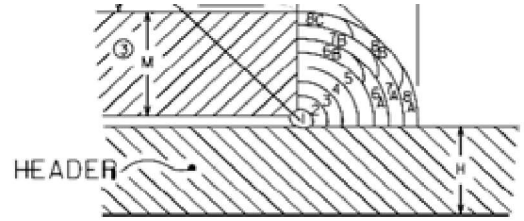

APPROVED FILLER METAL SELECTIONS

WALL THICK. (in)	ELECTRODE SIZE BY PASS			
	ROOT	HOT	FILLER(S)*	CAP(S)
MATERIAL	E6010	E8018-B2 H4R	E8018-B2 H4R	E8018-B2 H4R
ALL	3/32", 1/8", 5/32"	3/32"	3/32", 1/8"	3/32", 1/8"

ASSOCIATED ELECTRICAL CHARACTERISTICS

FILLER MATERIAL		WELDING PARAMETERS		TRAVEL
SIZE	CLASSIFICATION	AMPERAGE	VOLTAGE	SPEED (IPM)
3/32"	E6010	45 - 90	20 - 35	2 - 16
3/32"	E8018-B2 H4R	67 - 109	22 - 38	2 - 16
1/8"	E6010	95 - 145	20 - 33	2 - 16
1/8"	E8018-B2 H4R	95 - 160	19 - 32	2 - 16
5/32"	E8018-B2 H4R	100 - 145	19 - 32	2 - 16

*Stripper/Fill as required using the parameters of filler pass selection and associated characteristics

The procedure qualification was conducted in accordance with the requirements of the latest approved edition of API Standard 1104, CFR Title 49 Part 192 and Dominion Energy North Carolina and Dominion Energy South Carolina Engineering Specifications.

WPS SM-120 (click here for pdf version)

WPS No: SM-120

DATE: 5/1/2019

DESCRIPTION:	In-service welding procedure meeting the following requirements.
WELDING PROCESS:	Manual Shielded Metal Arc (SMAW) using stick electrodes.

PIPE AND FILLER MATERIAL REQUIREMENTS

PIPE AND FITTING MATERIAL:	Steel pipe and fitting grades with yield strengths equal to 65,000 psi.
NON-CARRIER DIAMETER AND WALL THICKNESS:	2-3/8(2.375)" thru 12-3/4(12.750)" O.D. and all wall thicknesses.
FILLER MATERIAL:	AWS E6010 root pass; AWS E8018-B2 H4R on remaining passes.
SHEILDING FLUX:	AWS cellulosic on root pass and low hydrogen on all remaining passes.

PRODUCTION WELDING CONDITIONS

WELDING TECHNIQUE:	Stringer	CURRENT/POLARITY:	Direct Current; reverse polarity, electrode positive
PIPE POSITION:	Pipe axis to be in a fixed position.	TEMP. MEASUREMENT:	Pyrometer or Tempil sticks
FITTING POSITION:	Position fitting and tack sufficiently to prevent shifting and warping during the welding process.		
DIRECTION OF WELDING:	Downhill on root pass and uphill on all remaining passes.		
NUMBER OF WELDERS:	One or two welders as needed; Root and hot pass welders shall be equal in number; Only one welder is required for roll or fabrication welding; Two welders simultaneously welding a circumferential weld must weld in opposite quadrants.		
TIME LAPSE BETWEEN PASSES:	Maximum time between the completion of the root pass and the start of the second shall be 5 minutes. Each pass		

TYPE/REMOVAL OF LINE-UP CLAMP:	Use devices as necessary to hold fitting in place until properly tacked.
CLEANING METHOD:	Use power and/or hand tools; remove all rust, dirt, and other foreign matter before starting weld; remove slag from bead surface before starting next bead; Root bead should be power ground as much as practical; All other passes should be power buffed as much as practical and power ground as needed; clean finished weld.
PREHEAT AND POSTHEAT:	Preheat to 150°F Min to 350°F Max when the pipe has a temperature of 40°F or below, is wet, has a wall thickness over 0.500", a carbon equivalent over 0.40% or a yield strength greater than 52ksi. Temperature control shall be verified with approved devices. No PWHT required.

GROOVE WELD BUTT JOINT DESIGN

For joints paralleling the axis of the carrier pipe may be fitted with a suitable tape or mild steel backing strip to prevent the weld from being fused to the surface of the carrier pipe.

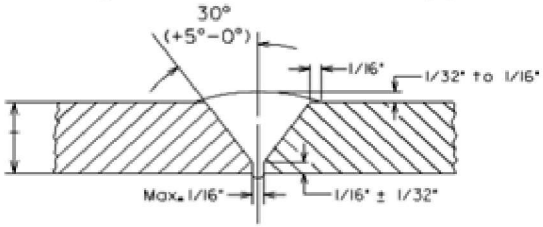

STANDARD "V" BEVEL BUTT JOINT

QUALIFIED JOINT DESIGN CONDITIONS

"V" groove composed of two 30 (+5 - 0) bevels with 1/16" spacing and 1/16" (+/- 1/32") land.

MINIMUM NO. OF PASSES

W.T. (in)	MIN. PASSES
≤ 0.250	3
> 0.250 ≤ 0.450	4
> 0.450 ≤ 0.650	5
> 0.650 ≤ 0.750	7

For sequencing of beads see reference drawings in section X of Welding Manual, Figures 2 thru 9 encompassing split, reinforcing and encirclement fittings.

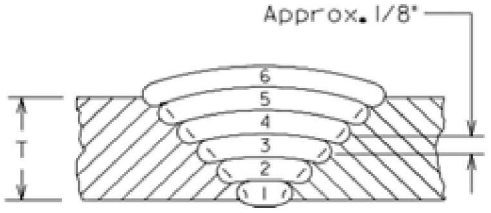

BRANCH AND SOCKET FILLET WELD JOINT DESIGN

Branch Type

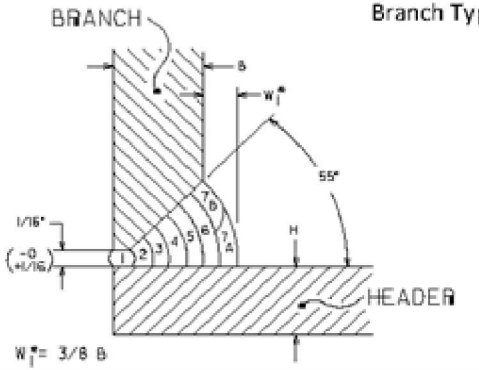

QUALIFIED JOINT DESIGN CONDITIONS

1. B or M to have MAOP ≥ Header.
2. Branch must be contoured to approx. curvature of Header.
3. Where M > H, the edges to be fillet welded shall be tapered to equal H while maintaining sufficient strength required by Condition 1.
4. Complete entire bead before starting next.
5. Minimum 1/4" overall dimension for weld widths W_1 and W_2.

Socket Type

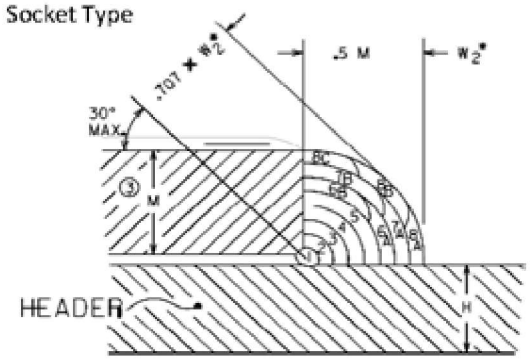

APPROVED FILLER METAL SELECTIONS

WALL THICK. (in)	ELECTRODE SIZE BY PASS			
	ROOT	HOT	FILLER(S)*	CAP(S)
MATERIAL	E6010	E8018-B2 H4R	E8018-B2 H4R	E8018-B2 H4R
ALL	3/32", 1/8"	3/32"	3/32", 1/8"	3/32", 1/8"

ASSOCIATED ELECTRICAL CHARACTERISTICS

FILLER MATERIAL		WELDING PARAMETERS		TRAVEL
SIZE	CLASSIFICATION	AMPERAGE	VOLTAGE	SPEED (IPM)
3/32"	E6010	45 - 90	20 - 35	2 - 16
3/32"	E8018-B2 H4R	70 - 120	20 -33	2 - 16
1/8"	E6010	80 - 130	23 - 34	2 - 16
1/8"	E8018-B2 H4R	105 - 150	18 - 31	2 - 16

*Stripper/Fill as required using the parameters of filler pass selection and associated characteristics

The procedure qualification was conducted in accordance with the requirements of the latest approved edition of API Standard 1104, CFR Title 49 Part 192 and Dominion Energy North Carolina and Dominion Energy South Carolina Engineering Specifications.

WPS SM-121 (click here for pdf version)

WPS No: SM-121

DATE: 5/1/2019

DESCRIPTION:	In-service welding procedure meeting the following requirements.
WELDING PROCESS:	Manual Shielded Metal Arc (SMAW) using stick electrodes.

PIPE AND FILLER MATERIAL REQUIREMENTS

PIPE AND FITTING MATERIAL:	Steel pipe and fitting grades with yield strengths equal to 65,000 psi.
NON-CARRIER DIAMETER AND WALL THICKNESS:	Over 12-3/4(12.750)" O.D. and all wall thicknesses.
FILLER MATERIAL:	AWS E6010 root pass; AWS E8018-B2 H4R on remaining passes.
SHEILDING FLUX:	AWS cellulosic on root pass and low hydrogen on all remaining passes.

PRODUCTION WELDING CONDITIONS

WELDING TECHNIQUE:	Stringer	CURRENT/POLARITY:	Direct Current; reverse polarity, electrode positive
PIPE POSITION:	Pipe axis to be in a fixed position.	TEMP. MEASUREMENT:	Pyrometer or Tempil sticks

FITTING POSITION:	Position fitting and tack sufficiently to prevent shifting and warping during the welding process.
DIRECTION OF WELDING:	Downhill on root pass and uphill on all remaining passes.
NUMBER OF WELDERS:	Minimum two welders required for sizes 14" thru 26" O.D.; Three or four welders required for sizes greater than 26" O.D.; Root and hot pass welders shall be equal in number; Only one welder is required for roll or fabrication welding; Two welders simultaneously welding a circumferential weld must weld in opposite quadrants.
TIME LAPSE BETWEEN PASSES:	Maximum time between the completion of the root pass and the start of the second shall be 5 minutes. Each pass must be completed in its entirety before subsequent passes are initiated.
TYPE/REMOVAL OF LINE-UP CLAMP:	Use devices as necessary to hold fitting in place until properly tacked.
CLEANING METHOD:	Use power and/or hand tools; remove all rust, dirt, and other foreign matter before starting weld; remove slag from bead surface before starting next bead; Root bead should be power ground as much as practical; All other passes should be power buffed as much as practical and power ground as needed; clean finished weld.
PREHEAT AND POSTHEAT:	Preheat to 150°F Min to 350°F Max when the pipe has a temperature of 40°F or below, is wet, has a wall thickness over 0.500", a carbon equivalent over 0.40% or a yield strength greater than 52ksi. Temperature control shall be verified with approved devices. No PWHT required.

GROOVE WELD BUTT JOINT DESIGN

For joints paralleling the axis of the carrier pipe may be fitted with a suitable tape or mild steel backing strip to prevent the weld from being fused to the surface of the carrier pipe.

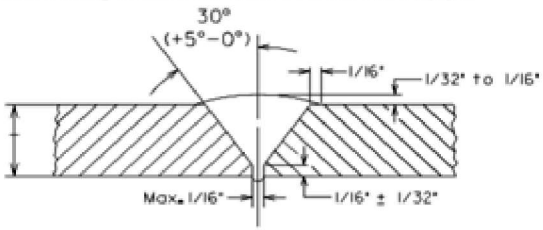

STANDARD "V" BEVEL BUTT JOINT

QUALIFIED JOINT DESIGN CONDITIONS

"V" groove composed of two 30 (+5 - 0) bevels with 1/16" spacing and 1/16" (+/- 1/32") land.

MINIMUM NO. OF PASSES

W.T. (in)	MIN. PASSES
≤ 0.250	3
> 0.250 ≤ 0.450	4
> 0.450 ≤ 0.650	5
> 0.650 ≤ 0.750	7

For sequencing of beads see reference drawings in section X of Welding Manual, Figures 2 thru 9 encompassing split, reinforcing and encirclement fittings.

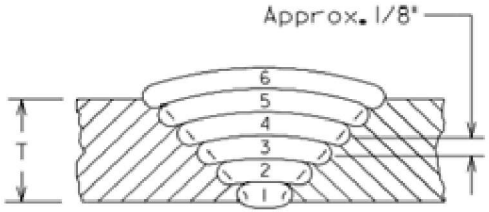

BRANCH AND SOCKET FILLET WELD JOINT DESIGN

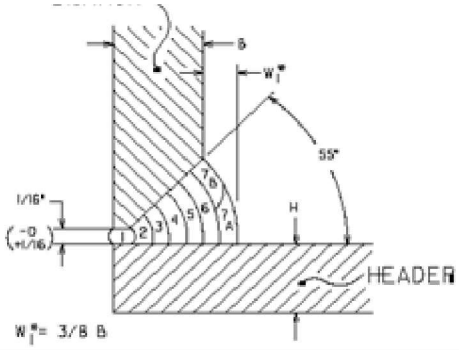

1. B or M to have MAOP ≥ Header.
2. Branch must be contoured to approx. curvature of Header.
3. Where M > H, the edges to be fillet welded shall be tapered to equal H while maintaining sufficient strength required by Condition 1.
4. Complete entire bead before starting next.
5. Minimum 1/4" overall dimension for weld widths W_1 and W_2.

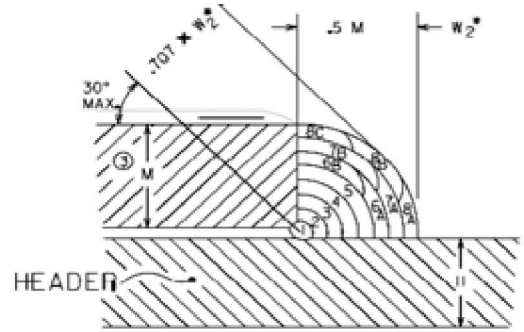

APPROVED FILLER METAL SELECTIONS				
WALL THICK. (in)	ELECTRODE SIZE BY PASS			
	ROOT	HOT	FILLER(S)*	CAP(S)
MATERIAL	E6010	E8018-B2 H4R	E8018-B2 H4R	E8018-B2 H4R
ALL	3/32", 1/8", 5/32"	3/32"	3/32", 1/8"	3/32", 1/8"

ASSOCIATED ELECTRICAL CHARACTERISTICS				
FILLER MATERIAL		WELDING PARAMETERS		TRAVEL
SIZE	CLASSIFICATION	AMPERAGE	VOLTAGE	SPEED (IPM)
3/32"	E6010	45 - 90	20 - 35	2 - 16
3/32"	E8018-B2 H4R	80 - 130	25 - 46	2 - 16
1/8"	E6010	100 - 165	29 - 44	2 - 16
1/8"	E8018-B2 H4R	100 - 175	23 - 50	2 - 16
5/32"	E8018-B2 H4R	120 - 175	29 - 46	2 - 16

*Stripper/Fill as required using the parameters of filler pass selection and associated characteristics

The procedure qualification was conducted in accordance with the requirements of the latest approved edition of API Standard 1104, CFR Title 49 Part 192 and Dominion Energy North Carolina and Dominion Energy South Carolina Engineering Specifications.

WPS SM-127 (click here for pdf version)

WPS No: SM-127

DATE: 5/1/2019

DESCRIPTION:	In-service welding procedure meeting the following requirements.
WELDING PROCESS:	Manual Shielded Metal Arc (SMAW) using stick electrodes.

PIPE AND FILLER MATERIAL REQUIREMENTS

PIPE AND FITTING MATERIAL:	Steel pipe and fitting grades with yield strengths equal to 70,000 psi.
NON-CARRIER DIAMETER AND WALL THICKNESS:	Over 12-3/4(12.750)" O.D. and all wall thicknesses.
FILLER MATERIAL:	AWS E6010 root pass; AWS E9018M H4R on remaining passes.
SHEILDING FLUX:	AWS cellulosic on root pass and low hydrogen on all remaining passes.

PRODUCTION WELDING CONDITIONS

WELDING TECHNIQUE:	Stringer	CURRENT/POLARITY:	Direct Current; reverse polarity, electrode positive
PIPE POSITION:	Pipe axis to be in a fixed position.	TEMP. MEASUREMENT:	Pyrometer or Tempil sticks
FITTING POSITION:	Position fitting and tack sufficiently to prevent shifting and warping during the welding process.		
DIRECTION OF WELDING:	Downhill on root pass and uphill on all remaining passes.		
NUMBER OF WELDERS:	Minimum two welders required for sizes 14" thru 26" O.D.; Three or four welders required for sizes greater than 26" O.D.; Root and hot pass welders shall be equal in number; Only one welder is required for roll or fabrication welding;		

TIME LAPSE BETWEEN PASSES:	Maximum time between the completion of the root pass and the start of the second shall be 5 minutes. Each pass must be completed in its entirety before subsequent passes are initiated.
TYPE/REMOVAL OF LINE-UP CLAMP:	Use devices as necessary to hold fitting in place until properly tacked.
CLEANING METHOD:	Use power and/or hand tools; remove all rust, dirt, and other foreign matter before starting weld; remove slag from bead surface before starting next bead; Root bead should be power ground as much as practical; All other passes should be power buffed as much as practical and power ground as needed; clean finished weld.
PREHEAT AND POSTHEAT:	Preheat to 150°F Min to 350°F Max when the pipe has a temperature of 40°F or below, is wet, has a wall thickness over 0.500", a carbon equivalent over 0.40% or a yield strength greater than 52ksi. Temperature control shall be verified with approved devices. No PWHT required.

GROOVE WELD BUTT JOINT DESIGN

For joints paralleling the axis of the carrier pipe may be fitted with a suitable tape or mild steel backing strip to prevent the weld from being fused to the surface of the carrier pipe.

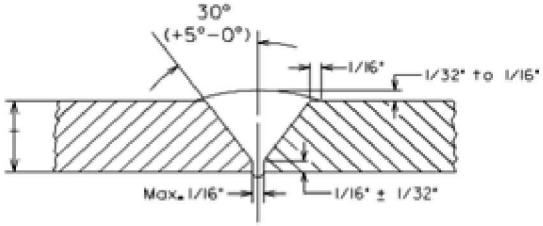

STANDARD "V" BEVEL BUTT JOINT

QUALIFIED JOINT DESIGN CONDITIONS

"V" groove composed of two 30 (+5 - 0) bevels with 1/16" spacing and 1/16" (+/- 1/32") land.

MINIMUM NO. OF PASSES

W.T. (in)	MIN. PASSES
≤ 0.250	3
> 0.250 ≤ 0.450	4
> 0.450 ≤ 0.650	5
> 0.650 ≤ 0.750	7

For sequencing of beads see reference drawings in section X of Welding Manual, Figures 2 thru 9 encompassing split, reinforcing and encirclement fittings.

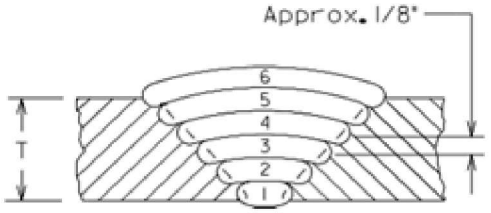

BRANCH AND SOCKET FILLET WELD JOINT DESIGN

Branch Type

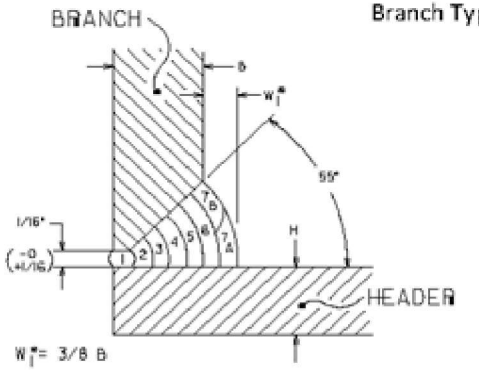

QUALIFIED JOINT DESIGN CONDITIONS

1. B or M to have MAOP ≥ Header.
2. Branch must be contoured to approx. curvature of Header.
3. Where M > H, the edges to be fillet welded shall be tapered to equal H while maintaining sufficient strength required by Condition 1.
4. Complete entire bead before starting next.
5. Minimum 1/4" overall dimension for weld widths W_1 and W_2.

Socket Type

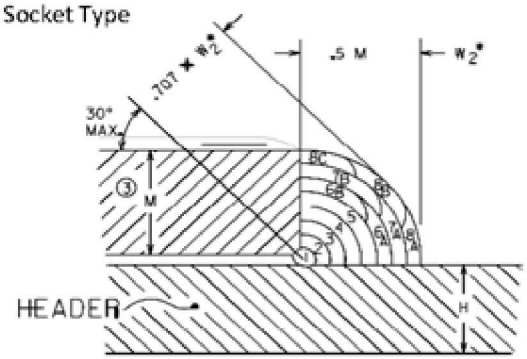

*AWS Class E9018M does not require extended PWHT.

APPROVED FILLER METAL SELECTIONS

WALL THICK. (in)	ELECTRODE SIZE BY PASS			
	ROOT	HOT	FILLER(S)*	CAP(S)
MATERIAL	E6010	E9018M H4R	E9018M H4R	E9018M H4R
ALL	3/32", 1/8"	3/32"	3/32", 1/8"	3/32", 1/8"

*Stringer/Fill as required using the parameters of filler pass selection and associated characteristics

ASSOCIATED ELECTRICAL CHARACTERISTICS

FILLER MATERIAL		WELDING PARAMETERS		TRAVEL
SIZE	CLASSIFICATION	AMPERAGE	VOLTAGE	SPEED (IPM)
3/32"	E6010	45 - 90	20 - 35	2 - 16
3/32"	E9018M H4R	70 - 120	18 - 33	2 - 16
1/8"	E6010	70 - 145	22 - 36	2 - 16
1/8"	E9018M H4R	100 - 175	23 - 50	2 - 16

The procedure qualification was conducted in accordance with the requirements of the latest approved edition of API standard 1104, CFR Title 49 Part 192 and Dominion Energy North Carolina and Dominion Energy South Carolina Engineering Specifications.

WPS SM-134 (click here for pdf version)

WPS No: SM-134

DATE: 5/1/2019

DESCRIPTION:	In-service seal welding of PLIDCO style mechanical repair sleeve to pipeline		
WELDING PROCESS:	Manual Shielded Metal Arc (SMAW) using stick electrodes		
PIPE AND FILLER MATERIAL REQUIREMENTS			
STUD AND NUT MATERIAL:	Grade B7 studs and grade 2H nuts.		
DIAMETER AND WALL THICKNESS:	N/A.		
FILLER MATERIAL:	AWS E7018 H4R on both "Nut-Fitting" pass and "Nut-Stud" pass.		
SHEILDING FLUX:	AWS low hydrogen on all passes.		
PRODUCTION WELDING CONDITIONS			
DIRECTION OF WELDING:	Uphill	CURRENT/POLARITY:	Direct Current; reverse polarity, electrode positive
WELDING TECHNIQUE:	Stringer	TEMP. MEASUREMENT:	Pyrometer or Tempil sticks
PIPE POSITION:	Pipe axis to be in a fixed position.		
NUMBER OF WELDERS:	One welder maximum.		
TIME LAPSE BETWEEN PASSES:	N/A.		
TYPE/REMOVAL OF LINE-UP CLAMP:	N/A.		
CLEANING METHOD:	Use power and/or hand tools; remove all rust, dirt, and other foreign matter before starting weld; remove slag from bead surface before starting next bead; Root bead should be power ground as much as practical; All other passes should be power buffed as much as practical and power ground as needed; clean finished weld.		
PREHEAT AND POSTHEAT:	Preheat to 150°F Min to 350°F Max when the pipe has a temperature of 40°F or below, is wet, has a wall thickness over 0.500", a carbon equivalent over 0.40% or a yield strength greater than 52ksi. Caution as to no overheat seal area (ie. not to exceed 225°F for BunaN seal material.) A higher preheat for stud welding helps to prevent microstructure. Temperature control shall be verified with approved devices. No PWHT required.		

WELD JOINT DESIGN FOR SEAL WELDING PLIDCO REPAIR FITTINGS

For sealing of "PLIDCO" style repair fittings.

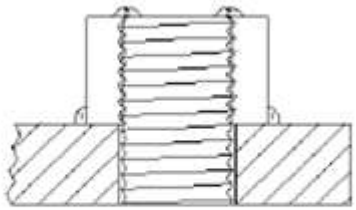

QUALIFIED JOINT DESIGN CONDITIONS

1. Size of fillet weld should be at least 1.4 times the wall thickness of pipe.
2. Strive for a concave faced fillet weld, with streamline blending in both members.
3. If studbolt lengths need to be cut, allow at least 1/4" beyond the nut for fillet weld.

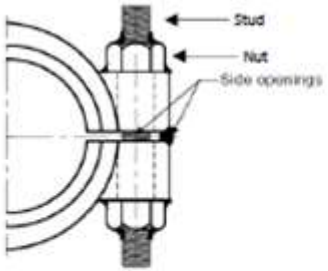

APPROVED FILLER METAL SELECTIONS | **ASSOCIATED ELECTRICAL CHARACTERISTICS**

WALL THICK.	ELECTRODE SIZE BY PASS				FILLER MATERIAL		WELDING PARAMETERS		TRAVEL
(in)	Nut-Fitting	Nut-Stud			SIZE	CLASSIFICATION	AMPERAGE	VOLTAGE	SPEED (IPM)
MATERIAL	E7018 H4R	E7018 H4R			3/32"	E7018 H4R	98 - 115	25 - 33	2 - 16
ALL	3/32"	3/32"							

*See PLIDCO "Split+Sleeve Installation Instructions" for further information on field welding instructions

The procedure qualification was conducted in accordance with the requirements of the latest approved edition of API Standard 1104, CFR Title 49 Part 192 and Dominion Energy North Carolina and Dominion Energy South Carolina Engineering Specifications.

WPS SM-135 (procedure under development)

(UNCONTROLLED IF PRINTED)